THINKY

EX-4827
[Original]

Planetary Centrifugal Mixer

THINKY MIXER
ARE-310
Instruction Manual

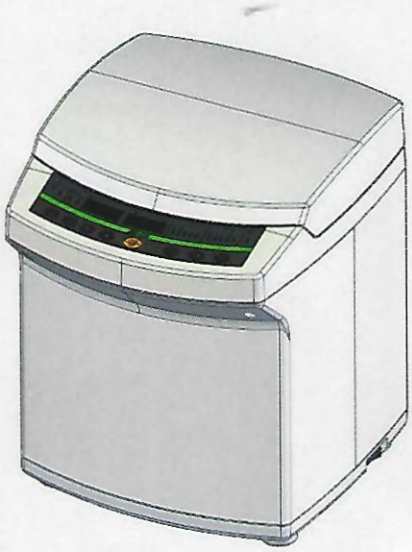

WARNING	• Read this manual carefully and be sure to understand the contents before operation. • Always keep this manual in the designated place for easy access whenever needed.

THINKY CORPORATION
"NIPPON MONOZUKURI" INNOVATOR
https://www.thinkymixer.com/en-us/
2-16-2 Sotokanda, Chiyoda-ku, Tokyo, #101-0021 Japan TEL: +81-3-5207-2666

Unauthorized reproduction prohibited.

ARE-310 Instruction Manual

Version EX-4827
(JP: EX-4826)
Date of Issue November 30, 2020

Published by THINKY CORPORATION

Introduction

THINKY MIXER “ARE-310” (hereafter called “UNIT”) is a highly efficient mixer developed to simultaneously mix and defoam materials (e.g. liquids and powder).

Please read this manual carefully and be sure to understand the contents before operating the UNIT.

There is a high-voltage electrical part and high-speed rotation part inside the UNIT.
This UNIT is designed to prevent possible danger from the parts, but serious or minor accidents may occur and/or the protective function may be impaired if you do not comply with the instructions in this manual.

Please DO NOT use the UNIT if anything is unclear, and contact the dealer from whom you purchased the UNIT or THINKY.

- **Contact Information**

  Dealer or THINKY Sales Representative or
  THINKY CORPORATION
  Marketing Office Tokyo, Japan (HQ):
  2-16-2 Sotokanda, Chiyoda-ku, Tokyo, #101-0021 Japan
  TEL: +81-3-5207-2666
  URL: https://www.thinkymixer.com/en-us/

- **Safety Indications**

The following safety precautions and symbols are used throughout this manual. Please read these safety precautions carefully and be sure you understand the contents before using the UNIT.
Safety precautions are classified into the following 3 levels to prevent possible accidents as a result of mishandling or incorrect operation.

Symbol	Definition
DANGER	Indicate(s) a hazardous situation that, if not avoided, will result in death or serious injury.
WARNING	Indicate(s) a hazardous situation that, if not avoided, could result in death or serious injury.
CAUTION	Indicate(s) a hazardous situation that, if not avoided, could result in minor or moderate injury.

In addition to the above, the following symbols are used.

Symbol	Definition
	Safety notes. Indicate(s) risk of damaging the UNIT from improper use.
	Additional information and tips.
	Reference section(s)

- THINKY CORPORATION (hereafter called "THINKY") shall not be responsible for the results of operations not as described in this manual or for use not conforming to the UNIT's intended use.
- The contents of this manual are subject to change, associated with continual improvement of the UNIT, without notice.
- Copying this manual in whole or in part, without written authorization from THINKY, is strictly prohibited.
- Upon resale or rental of the UNIT to another party, make sure to enclose this manual and any other documents supplied at initial delivery.
- Comply with national and local laws and regulations for the installation and operation procedures of this UNIT, and the disposal of its components.
- Contact THINKY for how to disassemble the UNIT for disposal.

Warranty and Liability

Please note the following conditions concerning THINKY's warranty and liability for the UNIT:

THINKY warrants all the products to be free from specification-based functional and performance defects within 12 months from the date of delivery/inspection.
The date of delivery/inspection will be the date written in the warranty or other valid proof of purchase or in the product purchase history database maintained by THINKY.
For failure occurring during the warranty period, we will repair or replace any defective component free of charge at the decision (discuss as appropriate) of THINKY except for cases coming under the conditions listed on the next page.

We accept no product returns for reasons other than repair or replacement.

Please contact the dealer from whom you purchased the UNIT or THINKY's service personnel when requesting the warrantied service. When returning a product for repair, please follow the instructions below.

- **When Returning Product for Repair**
  - Return products shall be sent in the approved way to the location designated by your dealer or THINKY together with the document with the date of delivery/inspection certifying the warranty period.
  - Please pack the UNIT in its original shipping carton or in a suitable packing material offering a similar degree of protection.
  - The cover of the UNIT may be opened during shipping, so please place packing materials between the cover and the UNIT, close and tape the cover securely.
  - To avoid damaging the UNIT during shipping, please protect accessories such as power cables with packing materials.

The following are NOT covered by the warranty.

1. Product-return shipping costs.
2. Second-hand unit NOT purchased through THINKY or our designated dealer.
   For those who purchased a second-hand unit from THINKY, the warranty conditions shall be subject to the provisions of each purchase contract.
3. Any UNIT distributed by unauthorized dealers
4. Any failure, damage or defect caused by components and/or accessories a customer installed in the UNIT, even though they are procured from vendors designated by THINKY. Any other unauthorized modification, disassemble, and/or repair of the UNIT by a customer. Please note that for such UNITs, we may even decline a request for paid repair service.
5. Any UNIT without a serial number or with a changed serial number
6. Any failure, damage or defect caused by or resulting from the following:
   - improper installation or usage of the UNIT
   - improper operation with non-standard voltage or power supply
   - receiving service or modification by an unauthorized service facility
   - misuse or unauthorized modification by customer
   - dropping hazardous/inflammable containers or adapters into the UNIT
   - scattering or spillage of mixing materials or solvents
   - excessive use or careless handling such as over-the-limit mixing
   - unavoidable accidents such as fires or floods
   - any other events similar thereto
7. Any failure, damage or defect caused by the use of spare parts or consumables, etc. that are not covered by this warranty.
8. Damage caused by aging deterioration, scratches or dents of the UNIT.
9. Any failure, damage or defect caused by dropping, vibration or impact to the UNIT by a customer at the time of or after the delivery.
10. Any failure, damage, defect, or corrosion (rust) caused by operation or storing environment exceeding the conditions stated in the specifications.
11. Any failure, damage or defect caused by the parts, system or specifications provided/designated by a customer.

12. Cost of breakage, physical loss of mixed materials, peripheral equipment, buildings, and expenses for temporary replacement unit/spare parts, lost profit, and/or any other incidental or consequential loss in general caused by this UNIT or its failure.
13. Quality of products produced by using the UNIT.
14. The following consumables:
    - containers
    - drive belt
    - fuse
    - adapter

Contents

Introduction I
Warranty and Liability IV
Contents i
1. Safety Precautions 1
1-1 Safety Precautions 1
1-1-1 General 1
1-1-2 Installation 2
1-1-3 Operation 3
1-1-4 Maintenance 4
1-1-5 Material Handling 4
1-1-6 Disposal 4
1-2 Labels 5
1-2-1 Seals and Labels 6
1-2-2 Locations of Seals and Labels 7
2. Overview and Specifications 8
2-1 Overview (Purpose, Operating Principles, Features) 8
2-2 Specifications 9
2-3 Names of Each Component 10
2-3-1 UNIT 10
2-3-2 Control Panel 11
3. Installation 12
3-1 Unpacking 12
3-2 Accessories 13
3-3 Unlocking and Storing Shipping Locks 15
3-4 Power Connection 17
4. Preparation 18
4-1 Container and Material 18
4-1-1 Container and Capacity 18
4-1-2 Preparation of Materials 19
4-2 Power On/Off 20
4-2-1 Power On 20

4-2-2 Power Off 20
4-3 Opening Door 21
4-3-1 Opening Door When Power Is Off 22
4-4 Setting Container 23
4-4-1 Setting a 300 ml Container 23
4-4-2 Setting a 150 ml Container 24
4-5 Adjusting Counterbalance 26
4-6 Closing Door 26
5. Operation 27
5-1 Mode Setting 27
5-1-1 Setting STD Mode 29
5-1-2 Setting STEP Mode 31
5-2 Starting Operation 35
5-3 Stopping Operation 36
5-4 Removing Container from Cup Holder 37
5-5 Memory Registration 38
5-5-1 Checking Registered Memory 38
5-5-2 Flowchart of Memory Registration 40
5-5-3 Memory Registration for STD Mode 42
5-5-4 Memory Registration for STEP Mode 43
5-5-5 Changing Registered Memory 45
5-5-6 Selecting Memory 45
6. Maintenance 46
6-1 Inspection 46
6-1-1 Daily Inspection 46
6-2 Cleaning 47
6-3 Troubleshooting 48
6-4 Error Display 50
6-5 Replacing Fuse 51
6-6 Warranty and After-sales Service 53

1. Safety Precautions

1-1 Safety Precautions

The UNIT is designed with due consideration for safety, but there may be great danger if handled improperly.
In order to prevent accidents, please be sure to follow the safety precautions.

1-1-1 General

WARNING	· Use of the UNIT is restricted to a specialist; read this manual carefully and be sure to understand the contents before operation. · Do not use the UNIT for purposes other than mixing and defoaming. · Do not disassemble or modify the UNIT. · Do not operate the UNIT under the following circumstances: — In a volatile atmosphere or where gas or steam is present — Around flammable substances · Do not handle the power plug with wet hands. · Be sure to connect the ground of the power plug. · Do not handle the UNIT within the reach of children.

CAUTION	· Do not get on top of the UNIT. · Do not place any object on the UNIT. · Do not put fingers or any other objects into the opening. · Do not place anything inside or spill liquid on the UNIT. · Do not wet the UNIT. · Do not operate the UNIT if there is any external damage such as breakages or large dents. · Do not obstruct the heat release. · When not in use, disconnect the plug from the outlet. · Pull the plug when disconnecting. Do not pull the cable. · Do not supply any voltage other than as rated. · Do not operate/store outdoors.

1-1-2 Installation

WARNING	・Turn off the power switch and disconnect the plug before locking or unlocking shipping locks.

CAUTION	・Do not install the UNIT in the following environments: – Unstable location – Location subject to vibration or impact – Presence of moisture, oil, chemicals, excessive dust, metal powder or salt – With high humidity or dew condensation due to rapid temperature change – In direct sunlight, rain or wind – Unstated ambient environment (See **2-2 Specifications** **"Working Environment Conditions"**) ・Do not damage, modify, forcibly bend or pull the power cable. Do not place anything on the power cable. ・Do not use a damaged power cable. ・Connect the plug of the UNIT to the dedicated outlet.

※ Please contact the dealer from whom you purchased the UNIT or THINKY's sales department/service department for installation/transportation of the UNIT.

1-1-3 Operation

DANGER	· Do not use dangerous, toxic and/or poisonous substances. — Do not mix any harmful and hazardous substances. — The UNIT is not explosion-proof. Due to rising temperature or volume increase by chemical reactions, substances (especially solvents with a low-boiling) in the container may ignite or explode if a leakage occurs in the UNIT.
WARNING	· Do not operate with volatile organic solvent, strong acid/alkaline materials. * Please contact the dealer from whom you purchased the UNIT or THINKY when such an operation is unavoidable. · If there is an abnormal vibration, sound, odor or smoke, immediately stop operation, turn off the power switch and disconnect the plug. · Do not open the door during operation. · Do not operate with the door open · Turn off the power switch and disconnect the plug if rotation does not stop. · Set the adapter or container into the cup holder properly.
CAUTION	· Comply with the fire service act, poisonous and deleterious substances control act, and/or related environmental pollution prevention acts when using the UNIT. · Do not operate with wet hands. · Do not shake or relocate the UNIT during operation. · Turn off the power switch in case of power failure. · Do not insert fingers into the openings around the cup holder. · Do not operate the UNIT continuously for a long time. Secure time for cool down. · Make sure no fingers or objects are caught in the door when closing. · Keep magnets or magnetic objects away from the control panel. · Attend to the UNIT within 30 minutes after operation.

1-1-4 Maintenance

WARNING	· Turn off the power switch and disconnect the plug before maintenance. · Do not disassemble any part for inspection or repair by yourself.

CAUTION	· Wipe off the plug connecting part with a dry cloth if dust adheres.

1-1-5 Material Handling

CAUTION	· Always obtain a Safety Data Sheet (SDS) for all the materials from the suppliers and handle them only after you have fully understood its characteristics and the safety measures. · Always use adequate protective equipment and wear appropriate clothing as specified in the applicable SDS when handling the material. · Disposal of the material must comply with the national and local laws and regulations where the UNIT is used.

1-1-6 Disposal

CAUTION	· Disposal of the UNIT and consumables must comply with the national and local laws and regulations where the UNIT is used.

1-2 Labels

The following labels are on the UNIT. Please understand the contents thoroughly before using the UNIT.
If a label is dirty, damaged or illegible, immediately contact the dealer from whom you purchased the UNIT or THINKY and ask for new labels. THINKY will provide new labels (paid service).

WARNING	・ Do not remove or stain any label.

Caution for high voltage
Danger of electric shock, burns or death by neglecting safety checks or incorrect operation.

Rotating mechanisms inside the safety cover
Danger of lacerations or bone fractures by hands or clothing getting caught in moving parts.

1-2-1 Seals and Labels

(1)

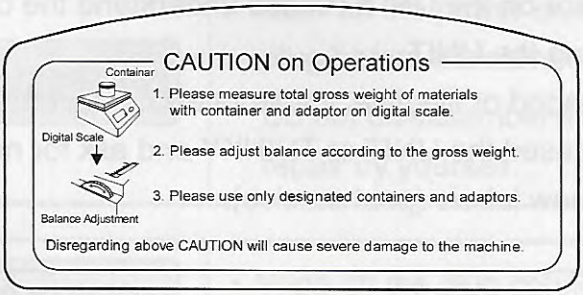

(2)

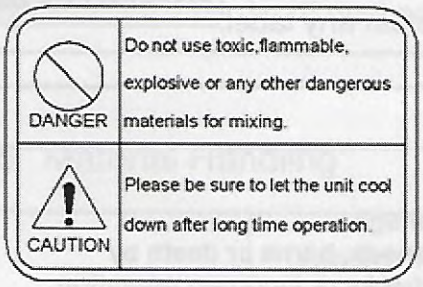

(3)

(4)

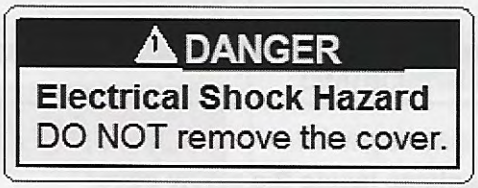

(5)

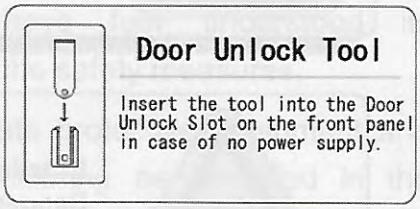

(6)

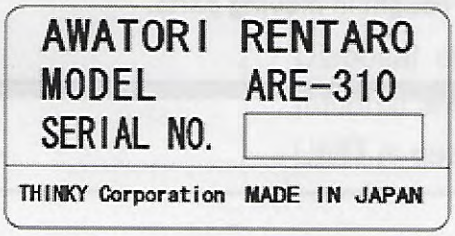

(7)

(8)

(9)

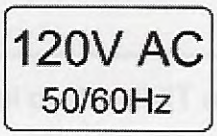

(10)

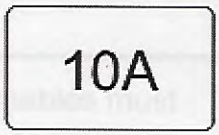

1-2-2 Locations of Seals and Labels

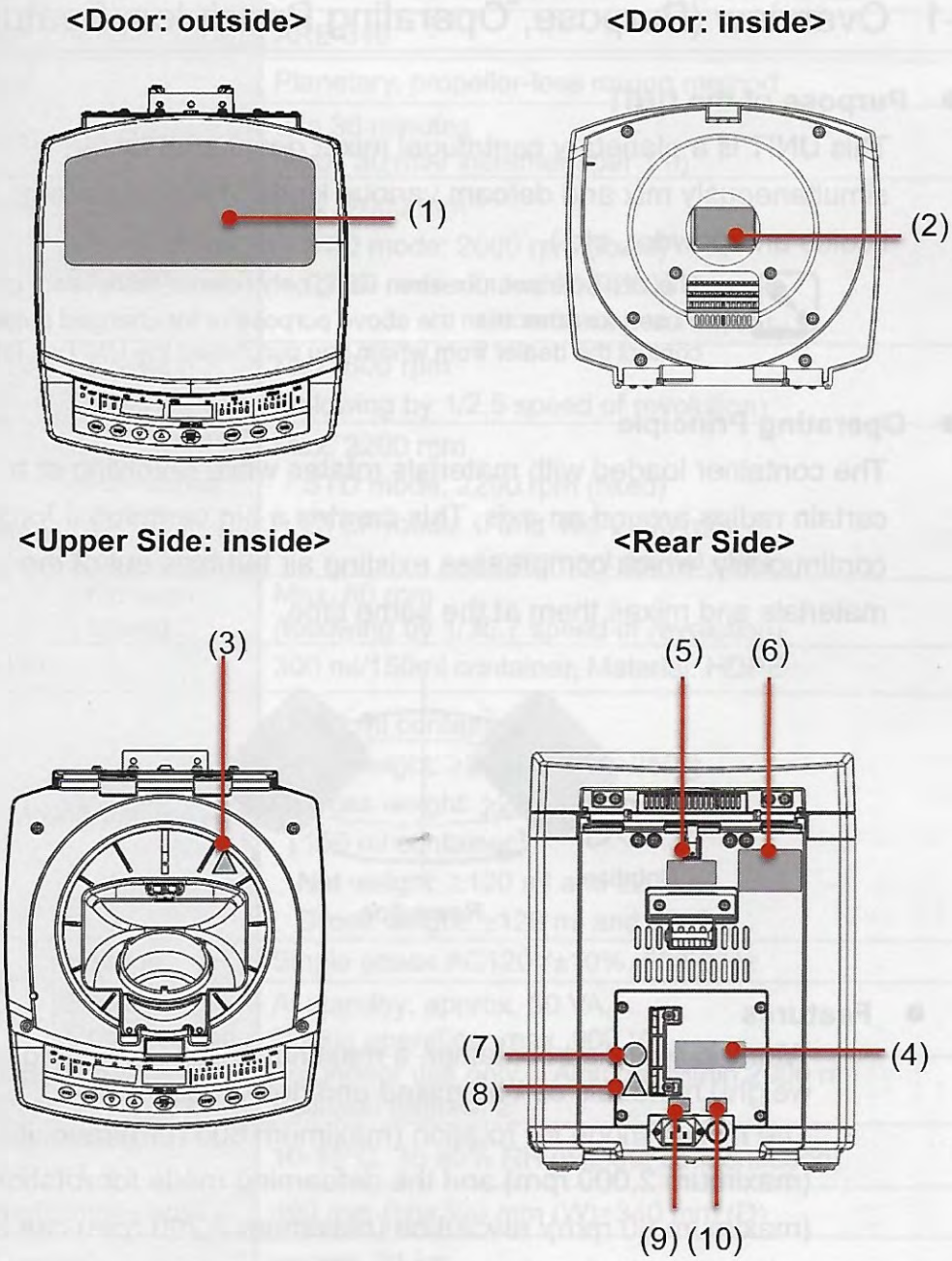

2. Overview and Specifications

2-1 Overview (Purpose, Operating Principles, Features)

- **Purpose of the UNIT**

  This UNIT is a planetary centrifugal mixer developed to simultaneously mix and defoam various kinds of materials (e.g. liquids and powder, etc.).

  - The UNIT cannot mix when using only powder materials.
  - If used for other than the above purpose or for changed purposes, contact the dealer from whom you purchased the UNIT or THINKY.

- **Operating Principle**

  The container loaded with materials rotates while revolving at a certain radius around an axis. This creates a big centrifugal force continuously, which compresses existing air bubbles out of the materials and mixes them at the same time.

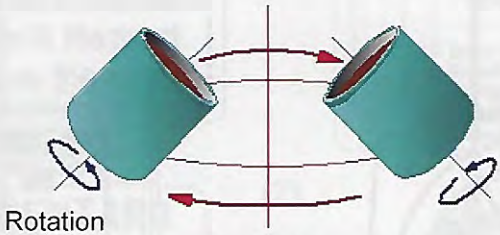

- **Features**
  - With the specified container, a maximum of 250 ml/310 g (gross weight) materials can be mixed and defoamed.
  - The mixing mode for rotation (maximum 800 rpm)/revolution (maximum 2,000 rpm) and the defoaming mode for rotation (maximum 60 rpm)/ revolution (maximum 2,200 rpm) can be set independently. Continuous operation is also possible.
  - Non-contact method (without mixing blade) prevents material deterioration.
  - Highly constant reproducibility can be realized in mixing/defoaming without individual variation.

2-2 Specifications

Product		Planetary Centrifugal Mixer "THINKY MIXER"
Model		ARE-310
Method		Planetary, propeller-less mixing method
Timer Setting Range		0 to 30 minutes (Max. 30 min/ increment per 1 s)
Mixing mode	Revolution Speed	Max. 2000 rpm ・STD mode: 2000 rpm (fixed) ・STEP mode: 0 and 200-2000 rpm (increment per 10 rpm)
	Rotation Speed	Max. 800 rpm (following by 1/2.5 speed of revolution)
De-foaming mode	Revolution Speed	Max. 2200 rpm ・STD mode: 2200 rpm (fixed) ・STEP mode: 0 and 400-2200 rpm (increment per 10 rpm)
	Rotation Speed	Max. 60 rpm (following by 1/36.7 speed of revolution)
Container		300 ml/150ml container, Material: HDPE
Max. Mixing Volume		【300 ml container】 Net weight: ≥250 ml and ≥250 g Gross weight: ≥250 ml and ≥310 g 【150 ml container】 Net weight: ≥120 ml and ≥200 g Gross weight: ≥120 ml and ≥310 g
Power Source	Voltage	Single phase AC120V±10%, 50/60 Hz
	Power Consumption	At standby: approx. 50 VA, During operation: max. 900 VA
Working environmental conditions		For indoor use only. Altitude: within 2000 m Pollution degree: 2(*)
Working ambient environment		10-35°C, 35-85% RH (without condensation)
External dimensions		390 mm (H)×300 mm (W)×340 mm (D)
UNIT weight		approx. 21 kg

*: Pollution degree 2: In general, only nonconductive pollution occurs. In some cases, however, conductivity temporarily caused by dew condensation needs to be predicted. (Example: Products used in ordinary office environments)

・ Gross weight = 300 ml container + materials or
= 150 ml container + adapter + materials

2-3 Names of Each Component

2-3-1 UNIT

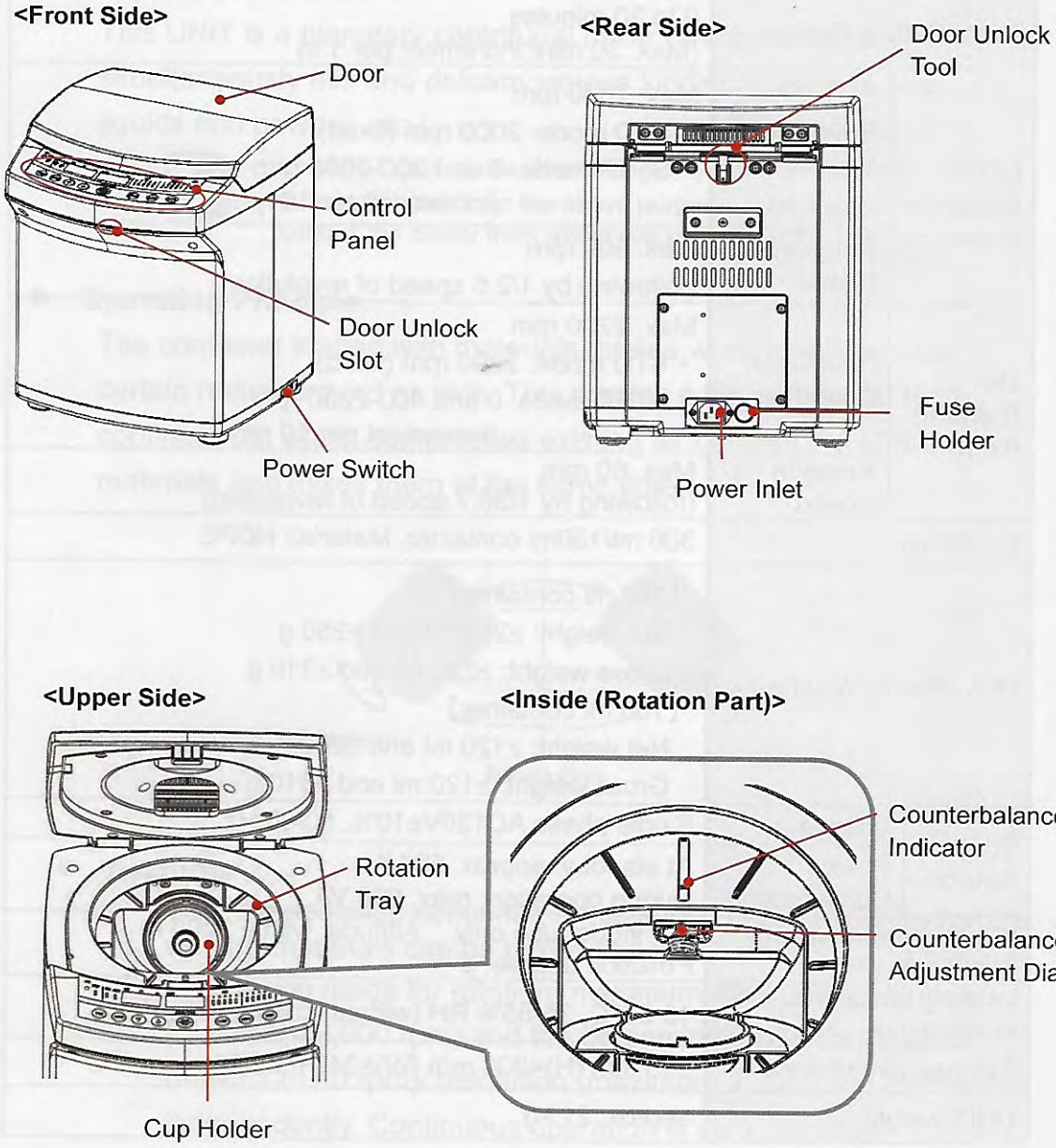

2-3-2 Control Panel

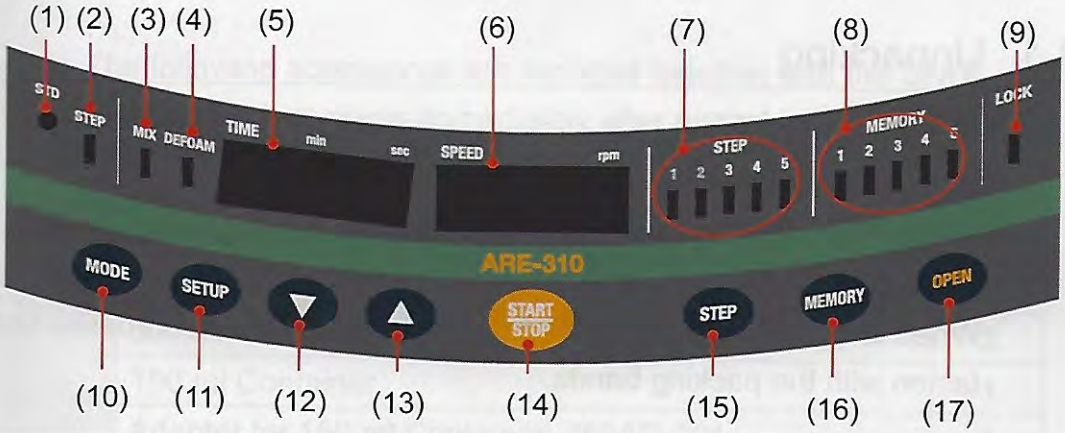

No.	Name	Function
(1)	STD Lamp	Lights up when selecting STD (standard) mode
(2)	STEP Lamp	Lights up when selecting STEP (step) mode
(3)	MIX Lamp	Lights up when setting or operating MIX
(4)	DEFOAM Lamp	Lights up when setting or operating DEROAM
(5)	TIME Indicator	Displays the operation time within the range of 00 min 00 s to 30 min 00 s
(6)	SPEED Indicator	Displays the revolution speed within the range of 0 and 200 to 2200 rpm.
(7)	STEP Lamp (1-5)	Lights up selected STEP No.
(8)	MEMORY Lamp (1-5)	Lights up selected MEMORY No.
(9)	LOCK Lamp	Lights up when the door is locked
(10)	MODE Button	Use to select between STD and STEP mode
(11)	SETUP Button	Use to set operating conditions Use to select between MIX and DEFOAM for each steps of operation
(12)	DOWN Button	Decreases value when setting the operation TIME and SPEED.
(13)	UP Button	Increases value when setting the operation TIME and SPEED
(14)	START/STOP Button	Push to start or stop the UNIT
(15)	STEP Button	Use to select STEP number Each time the button is pushed, the lamp lights in the order from 1 to 5.
(16)	MEMORY Button	Use to select and register operating conditions Each time the button is pushed, the lamp lights in the order from 1 to 5. To register operating conditions, push the button for more than 1 second.
(17)	OPEN Button	Use to unlock the door

3. Installation

3-1 Unpacking

The UNIT is packed as follows.
Take off the packing bands and unpack as shown in the illustration below.
When shipping, pack the UNIT according to the illustration below and fasten with the packing bands.

- Keep the box and the packing materials safe for reshipment.

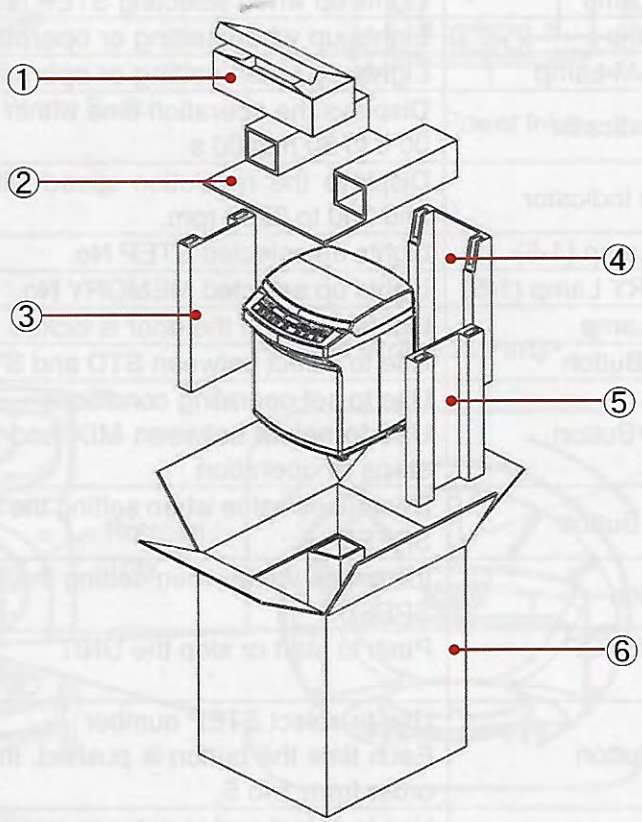

① Accessory box	④ Side board B
② Top board	⑤ Side board C
③ Side board A	⑥ Box

3-2 Accessories

The following accessories are included together with the UNIT.
Please check contents immediately after unpacking.

(1)	Instruction Manual (this manual)	1
(2)	Power Cable (including a 3Pin-2Pin conversion plug)	1
(3)	300 ml Container: No.002	3
(4)	150 ml Container	1
(5)	Adapter for 150 ml Container: 250AD-201	1
(6)	Silicon Ring for Adapter of 150 ml Container	1
(7)	Door Unlock Tool (stored in the back of the UNIT when shipping)	1
(8)	Shipping Lock A (mounted to the inside of the UNIT when shipping): 2 M4x35 Philips screws with rubber retaining washers	1
(9)	Shipping Lock B (mounted to the rear side of the UNIT when shipping)	1
(10)	Phillips Screw for Shipping Lock B (L): M5x40	1
(11)	Phillips Screws for Shipping Lock B (S): M4x15	2

- Use appropriate Phillips screwdrivers with the above 3 kinds of Phillips head screws.

(1)

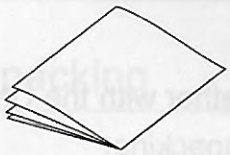

(2)

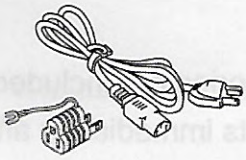

(3)

(4)

(5)

(6)

(7)

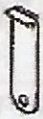

(8)

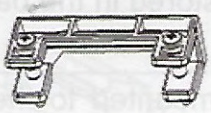

(9)

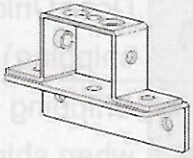

(10)

(11)

3-3 Unlocking and Storing Shipping Locks

The rotating part of the UNIT is securely fixed with shipping locks to prevent damage from shipping.
Remove the shipping locks before operation.

CAUTION	・ The shipping locks and attached screws are needed when shipping the UNIT again. Be sure to keep them in the designated positions to avoid losing them. ・ Be sure to store the removed shipping locks and screws as indicated. Otherwise, the rotating part will be exposed partially and may cause serious damage during operation.

● Removing and Storing Shipping Lock A

Remove shipping lock A from the upper inside of the UNIT and store it in the back side.

1) Loosen the 2 screws and remove the shipping lock A by pulling up the head of the screws.

The screws have rubber retaining washers to prevent them from falling out.

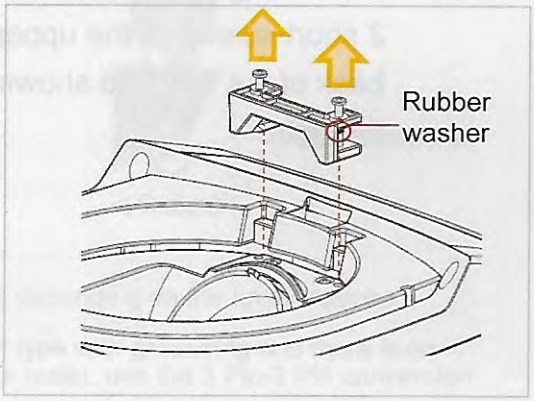

2) Fix and store the shipping lock A with the 2 screws to the back of the UNIT.

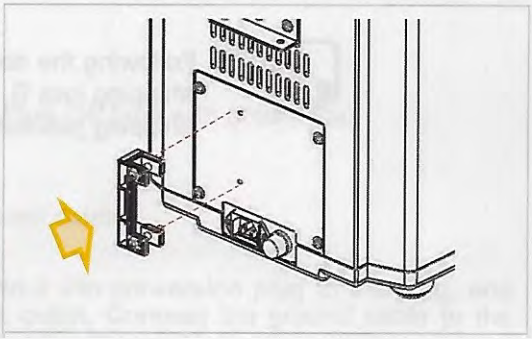

● Removing and Storing Shipping Lock B

Remove to store shipping lock B from the back of the UNIT.

1) Remove 3 screws (1 long, 2 short) from the shipping lock B, and then pull out the shipping lock from the UNIT.

The inside of the UNIT will be visible.

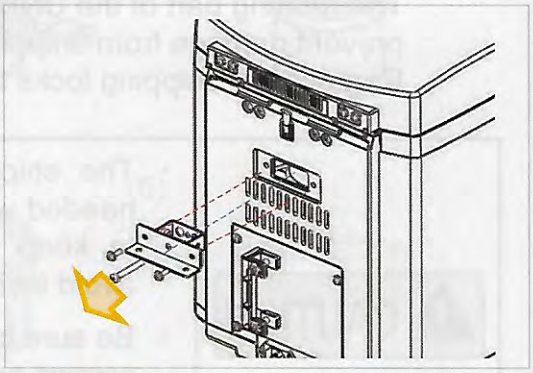

2) First, prepare the shipping lock B to store.

Fix the long screw as shown on the right.

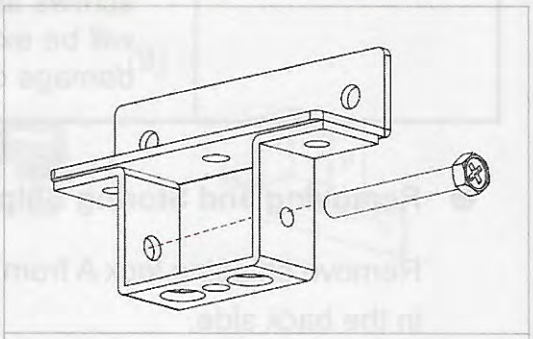

3) Fix the shipping lock B with the 2 short screws at the upper back of the UNIT as shown on the right.

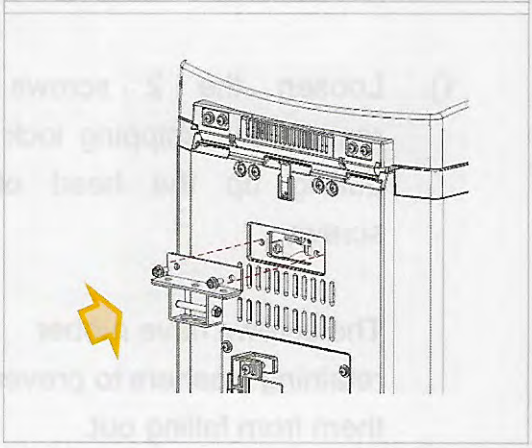

- Following the above procedure in reverse order, put back the shipping lock B, and then shipping lock A in its designated shipping positions when transporting.

3-4 Power Connection

Connect the power cable as shown in the following procedure.

WARNING

- Do not handle the power plug with wet hands. It may cause an electric shock.
- Be sure to connect the ground of the power plug.

1) Insert the power cable to inlet in the rear side of the UNIT.

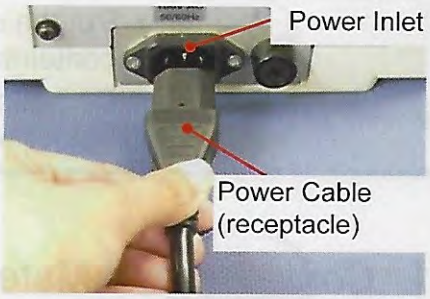

2) Insert the power plug all the way into the outlet.

Be sure to connect the ground terminal of the power plug to the terminal of outlet.

- Connect the power cable individually to the dedicated outlet for the UNIT.

- The plug configuration varies depending on the specifications.
- If the plug configuration is 3P type with grounding and there is no grounding terminal hole in the outlet, use the 3 Pin-2 Pin conversion plug in the accessories.

3 Pin-2 Pin conversion plug

In that case, attach the 3 Pin-2 Pin conversion plug to the plug, and then insert the plug into the outlet. Connect the ground cable to the grounding cable terminal.

4. Preparation

CAUTION	• Always obtain a Safety Data Sheet (SDS) for all the materials from the suppliers and handle them only after you have fully understood the characteristics and the safety measures. • Always use adequate protective equipment and wear appropriate clothing as specified in the applicable SDS when handling the material. • Put the designated volume of materials into the container. • Do not put fingers into the openings around the cup holder when inserting or removing a container.

4-1 Container and Material

Prepare and put the materials to be mixed into an adequate container.

4-1-1 Container and Capacity

The maximum mixing volume for the specified container is shown below.
Be sure never to load containers with the amount exceeding the volume. Also, do not operate with an empty container.

	Maximum processing volume		
Type	Volume	Net weight	Gross weight
300 ml container	250 ml	250 g	310 g
150 ml container	120 ml	200 g	310 g

- Gloss weight = 300 ml container + materials or
  = 150 ml container + adapter + materials
- Only use the specified container.
- When a material is less than 50 g, use the 150 ml container.

- If you want to use a container other than the specified container, please contact the dealer from whom you purchased the UNIT or THINKY

4-1-2 Preparation of Materials

Put materials into the container as follows.

1) Open the outer and inner lids. (using 300 ml container)

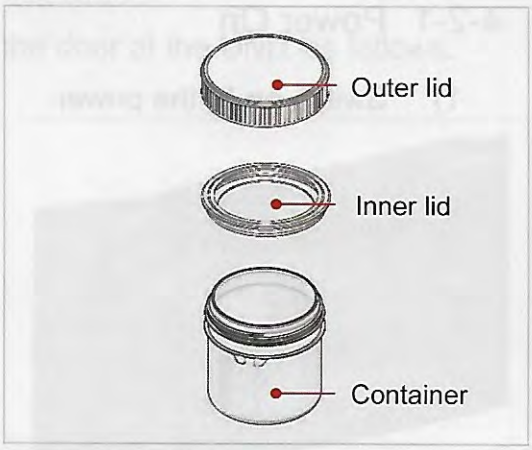

2) Put materials into the container.

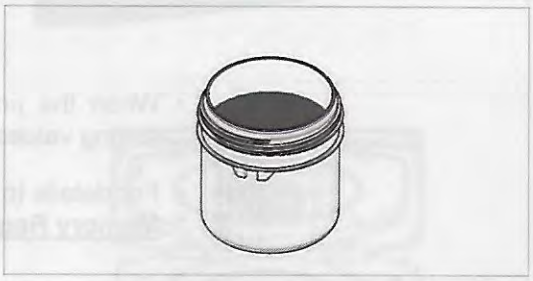

- Loading the container with exceeding volume will result in mixing failure and leakage. Please put materials up to approx. 80% of container.

3) Close the lids tightly.

- Ensure that the materials do not contact with the brim of the container. Be sure to clean the brim by the indication of material's SDS when it occurs. Dispose any used cloth, rag, or paper towel in accordance with national and local laws and regulations.
- Be sure to check that the screw thread of the container is clean and without damage before closing.
- Do not use damaged containers or containers with loose lids.

- To improve mixing efficiency, put materials into the container in the following order.
  - Liquid and paste materials first, and then powder materials
  - Materials of lighter specific gravity first and heavier specific gravity later
  - Materials of lower viscosity first and higher viscosity later

4-2 Power On/Off

4-2-1 Power On

1) Switch on (I) the power.

[I] Power On
[O] Power Off

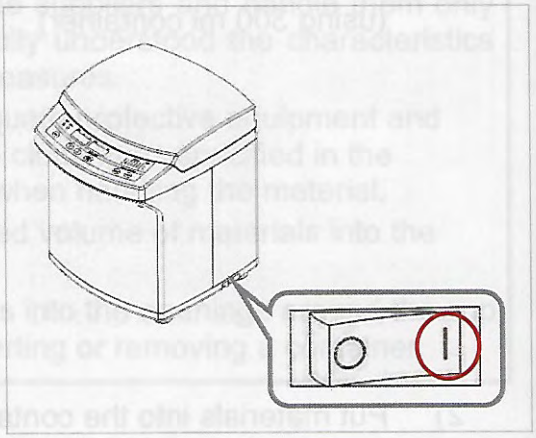

- When the power is turned on for the first time, the factory setting values are already registered in MEMORY1.

- For details to check/change the factory setting values, see **5-5 Memory Registration**.

4-2-2 Power Off

1) Switch off (O) the power.

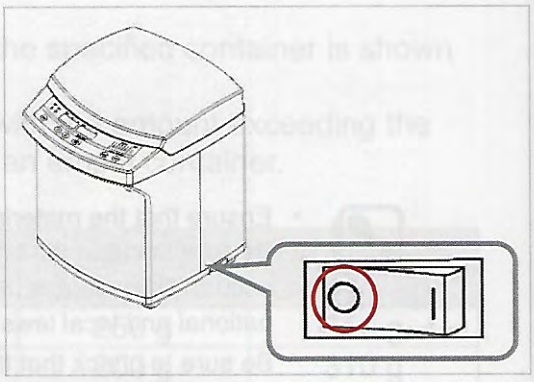

2) Disconnect the plug from the outlet.

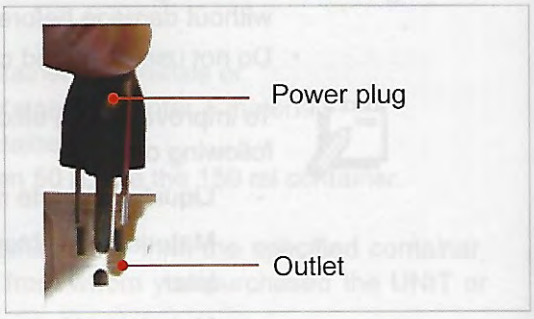

4-3 Opening Door

After turning the power on, open the door of the UNIT as follows.

1) Push the OPEN button.

The door lock will be released.

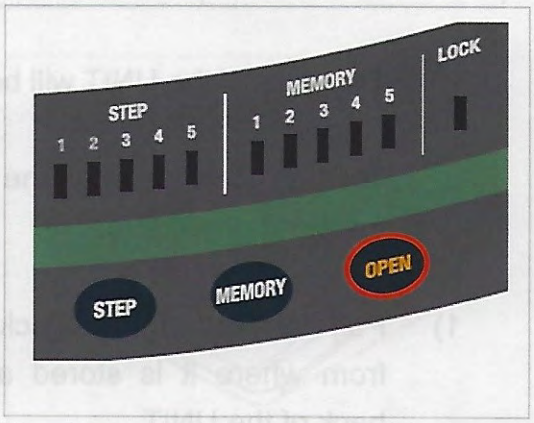

2) Open the door of the UNIT.

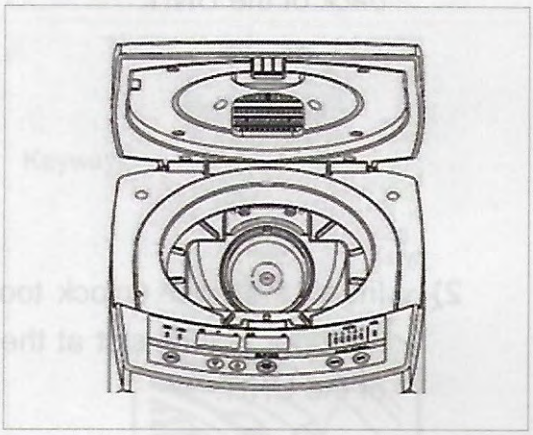

4-3-1 Opening Door When Power Is Off

CAUTION	· Be sure to store the door unlock tool in the designated place after use.

The door of the UNIT will be locked automatically when the door is closed.
To open the door when the power is off (O), unlock according to the following procedure.

1) Pull out the door unlock tool from where it is stored at the back of the UNIT.

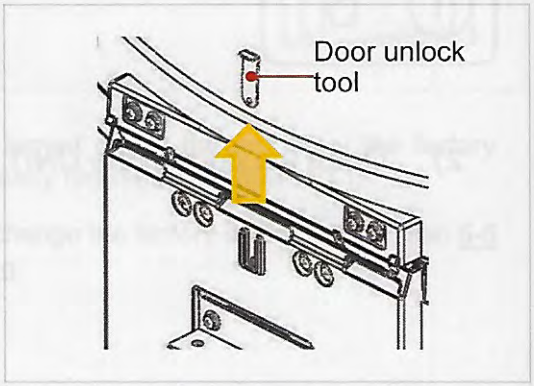

2) Insert the door unlock tool into the door unlock slot at the front of the UNIT.

The lock of the door will be released.

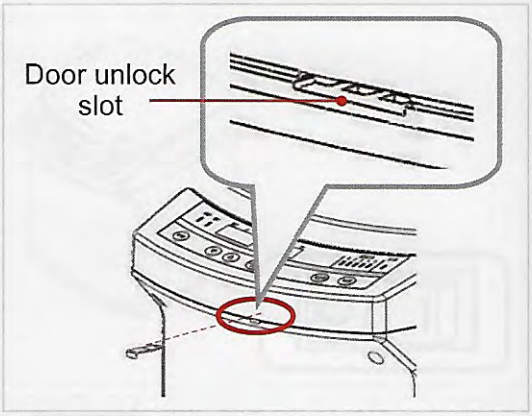

3) Put the door unlock tool back in its original position and open the door.

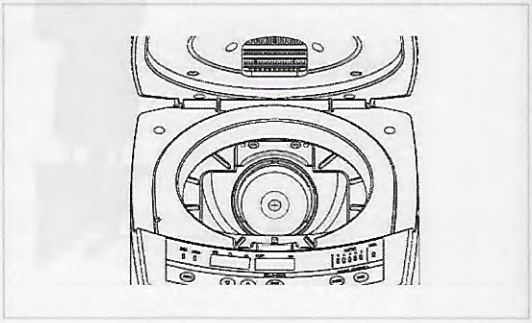

4-4 Setting Container

4-4-1 Setting a 300 ml Container

Set the container loaded with materials in the UNIT.

1) Weigh the 300 ml container loaded with materials. Check that the gross weight is less than or equal to the maximum mixing volume.

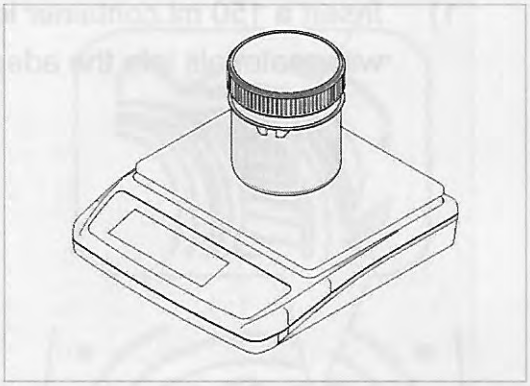

2) To set the container into the cup holder of the UNIT, align the 3 keyways of the container with the 3 keys of the cup holder.

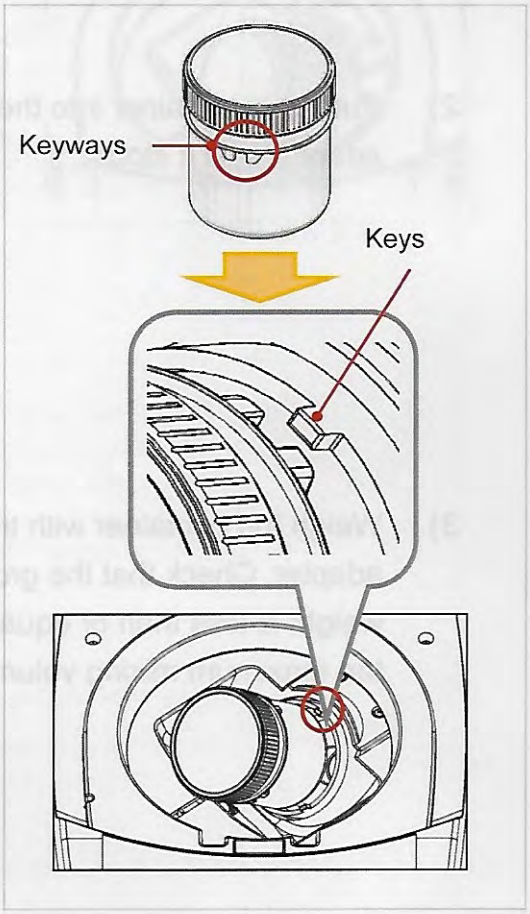

4-4-2 Setting a 150 ml Container

Set the container loaded with materials into the specified adapter, and then set them in the UNIT.

1) Insert a 150 ml container loaded with materials into the adapter.

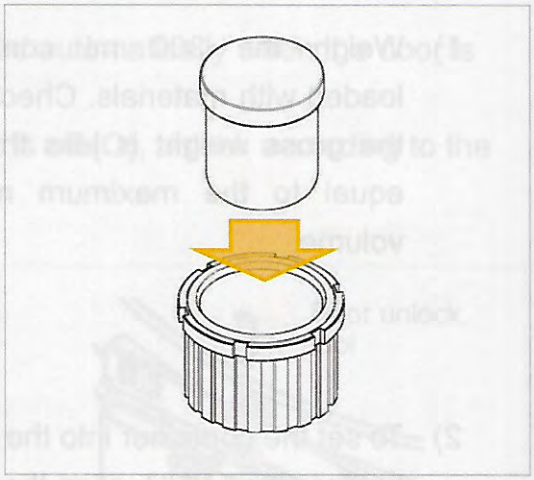

2) Push the container into the adapter until it stops.

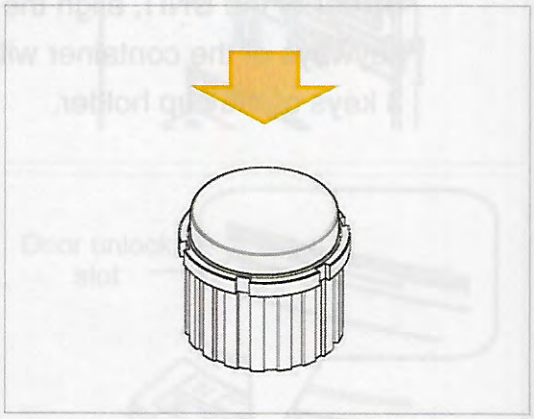

3) Weigh the container with the adapter. Check that the gross weight is less than or equal to the maximum mixing volume.

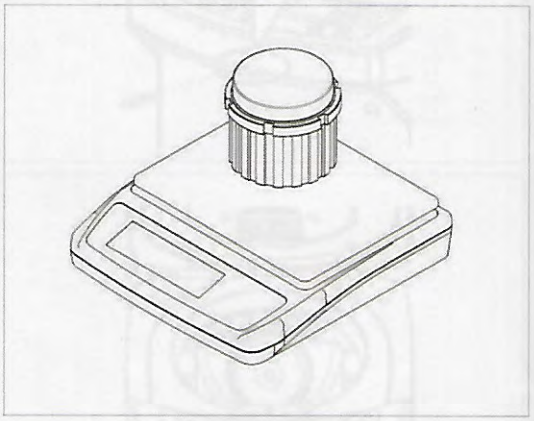

4) To set the container with adapter into the cup holder of the UNIT, align any 3 keyways of the adapter with the 3 keys of the cup holder.

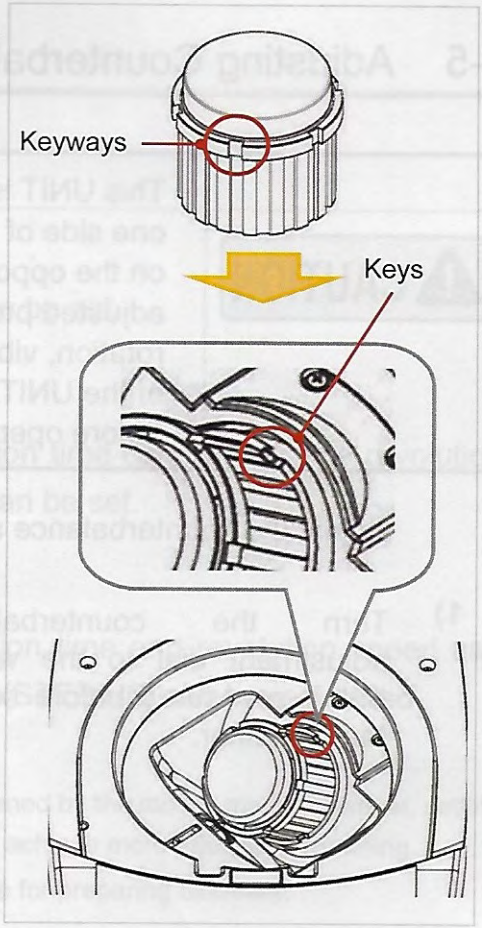

- Securely push the adapter and container into the cup holder.

4-5 Adjusting Counterbalance

CAUTION	・This UNIT is designed to set a container in only one side of the rotating part. If the dummy weight on the opposite side of the cup holder is not adjusted properly, it may cause off-balanced rotation, vibration/noise increase, and/or damage of the UNIT. Always adjust the counterbalance before operation.

Adjust the counterbalance after setting the container in the UNIT.

1) Turn the counterbalance adjustment dial to the weight that is measured before setting the container.

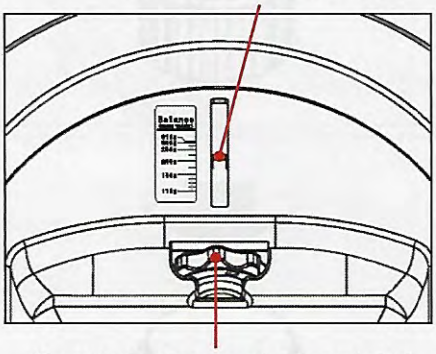

・The optimal position of the counterbalance indicator may differ depending on materials' specific gravity, viscosity, presence/absence of the adapter, etc.
If the vibration or noise increases, adjust the dial to find the position that minimizes the vibration or noise.

4-6 Closing Door

Close the door after the counterbalance adjustment.
The door will be locked automatically when it is closed.

・Check that no parts of clothes or foreign objects are caught in the door.

5. Operation

5-1 Mode Setting

The following operation modes can be set.

- STD (standard) mode:
  Mixing and defoaming operation time can be set. The revolution speed is fixed. Only STEP 1 can be set.

- STEP (step) mode:
  Mixing and defoaming operation time and revolution speed can be set. A maximum of 5 steps (STEP1-5) can be registered.

- Defoaming can be performed by the mixing mode; however, setting the defoaming mode can achieve more effective defoaming.
- Use only the mixing mode for preparing ointment.

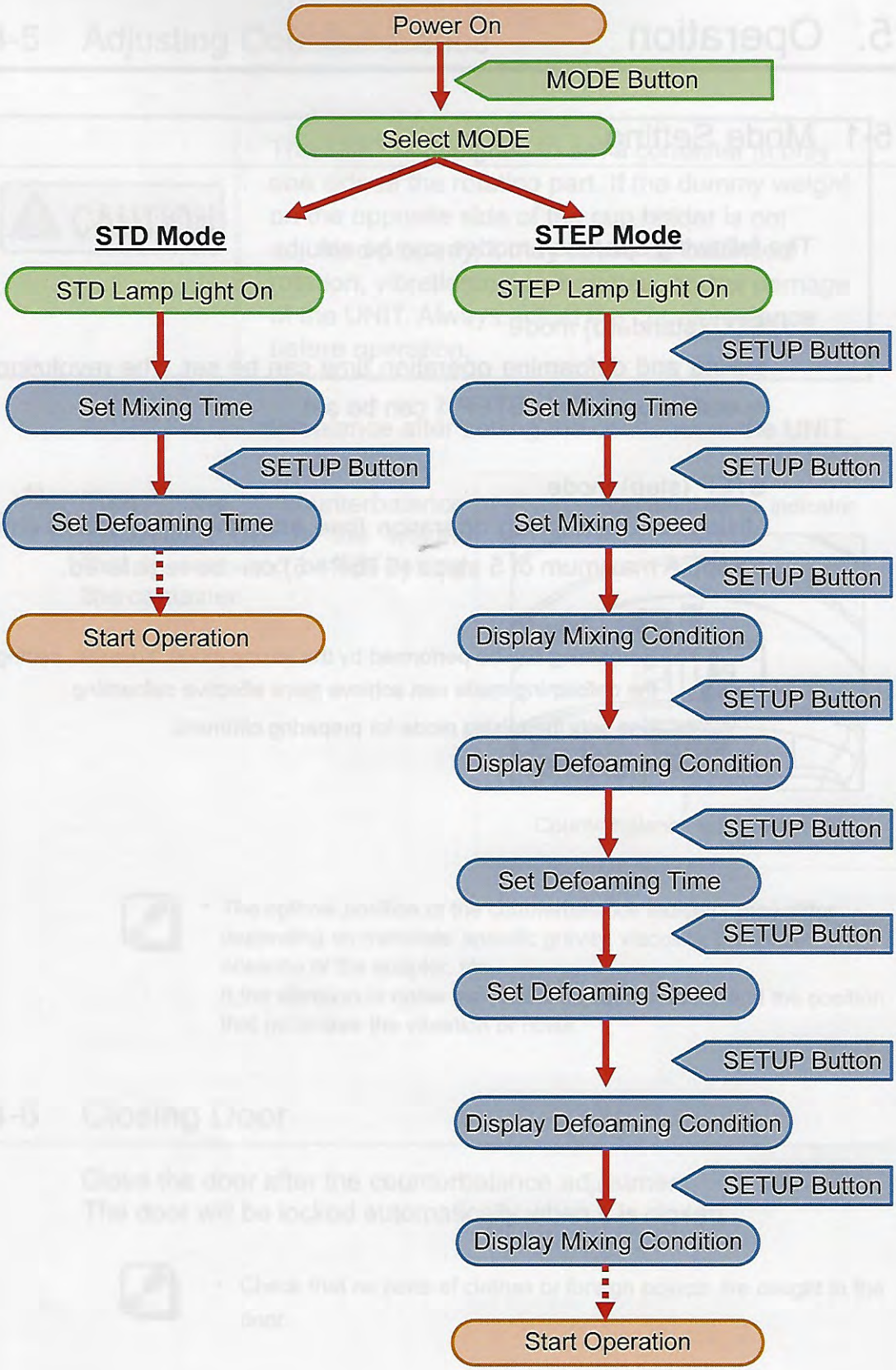
Power On
MODE Button
Select MODE
STD Mode
STEP Mode
STD Lamp Light On
Set Mixing Time
SETUP Button
Set Defoaming Time
Start Operation
STEP Lamp Light On
SETUP Button
Set Mixing Time
SETUP Button
Set Mixing Speed
SETUP Button
Display Mixing Condition
SETUP Button
Display Defoaming Condition
SETUP Button
Set Defoaming Time
SETUP Button
Set Defoaming Speed
SETUP Button
Display Defoaming Condition
SETUP Button
Display Mixing Condition
Start Operation

5-1-1 Setting STD Mode

Set the operating conditions for the STD mode as follows.

1) Push the MODE button to light the STD lamp.

The MIX lamp will be on.
The mixing time can be set.

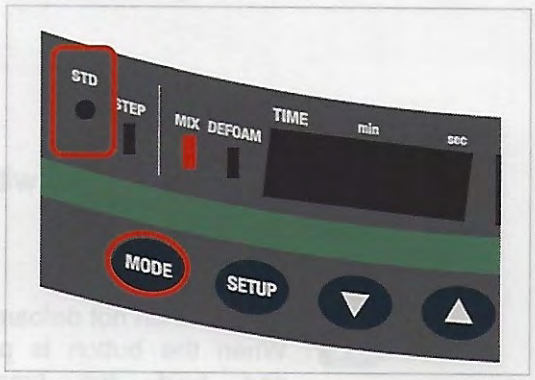

2) Set the mixing time with UP and DOWN buttons.

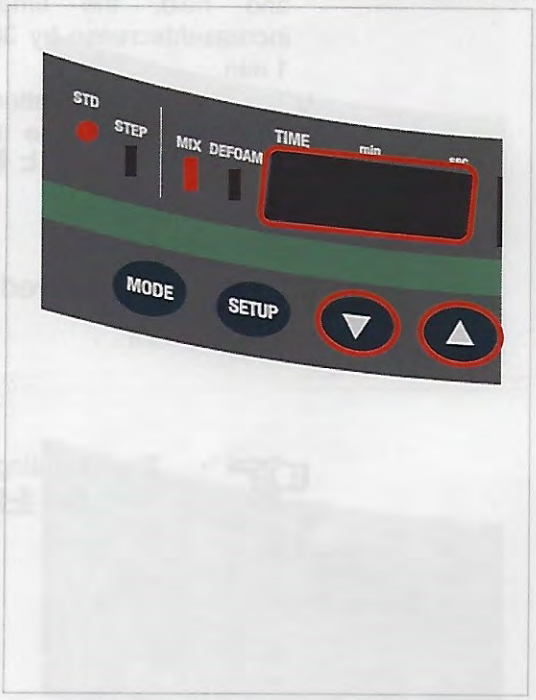

- Set "0" when not mixing.
- When the button is pushed and held, the time will increase/decrease by 30 sec or 1 min.
- The maximum operation time is 30 min. When the time is over 30 min, "ｔｔｔｔ" will be displayed.

The value will be displayed on the TIME indicator.

3) Push the SETUP button.

The MIX lamp will be off and the DEFOAM lamp will be on.
The defoaming time can be set.

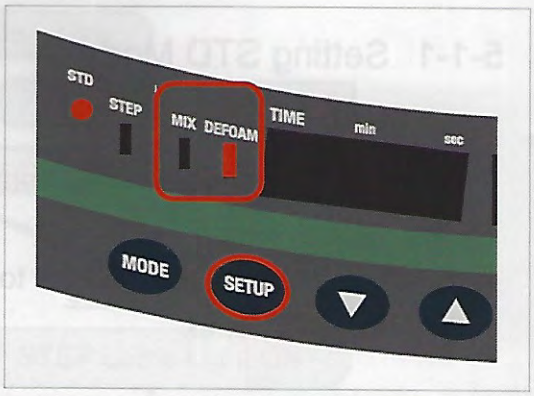

4) Set the defoaming time with UP and DOWN buttons.

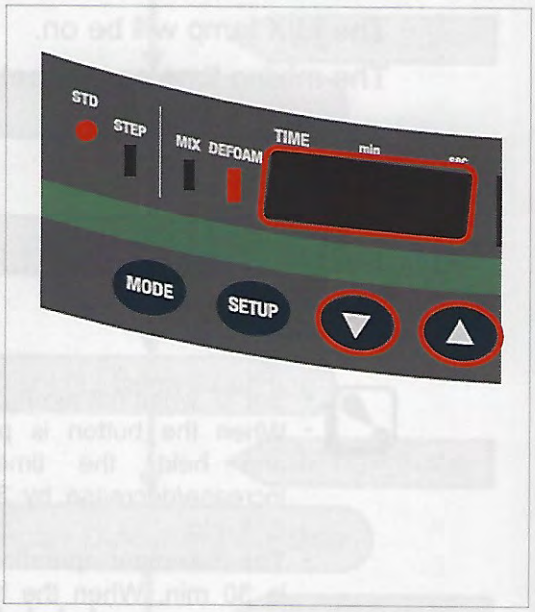

- Set "0" when not defoaming.
- When the button is pushed and held, the time will increase/decrease by 30 s or 1 min.
- The maximum operation time is 30 min. When the time is over 30 min, "t t t t" will be displayed.

The value will be displayed on the TIME indicator.

- The operating conditions need to be registered in MEMORY to save. See **5-5 Memory Registration**.

5-1-2 Setting STEP Mode

Set the operating conditions for the STEP mode as follows.

1) Push the MODE button to light the STEP lamp.

The MIX lamp will be on.

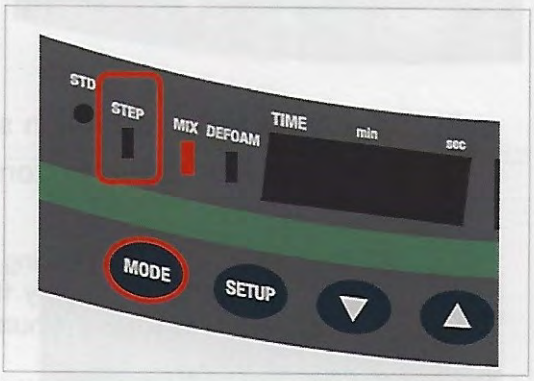

2) Push the SETUP button.

The TIME indicator will light up.
The mixing time can be set.

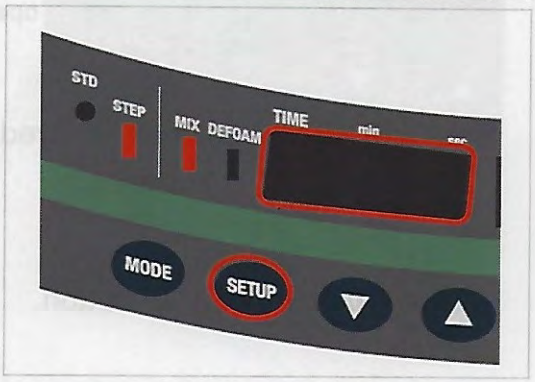

3) Set the mixing time with UP and DOWN buttons.

- Set "0" when not mixing.
- When the button is pushed and held, the time will increase/decrease by 30 s or 1 min.
- The maximum operation time is 30 min. When the time is over 30 min, "t t t t" will be displayed.

The value will be displayed on the TIME indicator.

4) Push the SETUP button.

The SPEED indicator will light up.
The mixing speed can be set.

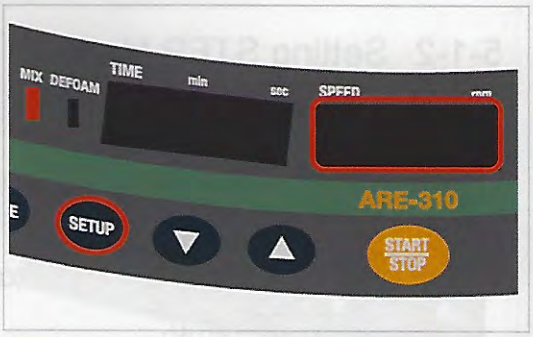

5) Set the mixing revolution speed with UP and DOWN buttons.

- Set "0" when not mixing.
- Increase/Decrease by 10 rpm each time when the button is pushed.
- The maximum operation speed is 2000 rpm.

The value will be displayed on the SPEED indicator.

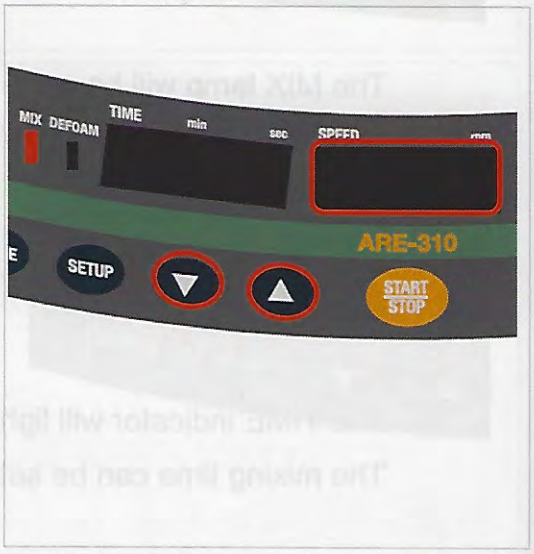

6) Push the SETUP button.

The set mixing conditions will be displayed on the TIME and SPEED indicators.

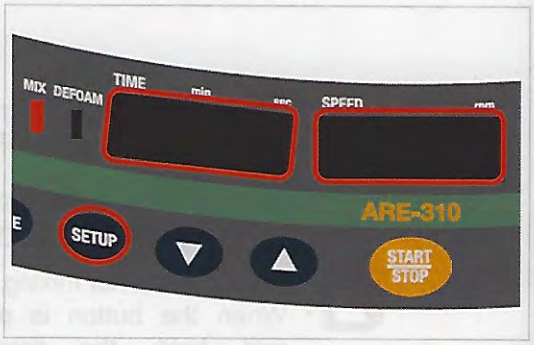

7) Push the SETUP button.

The MIX lamp will be off and the DEFOAM lamp will be on.
The defoaming conditions will be displayed on the TIME and SPEED indicators.

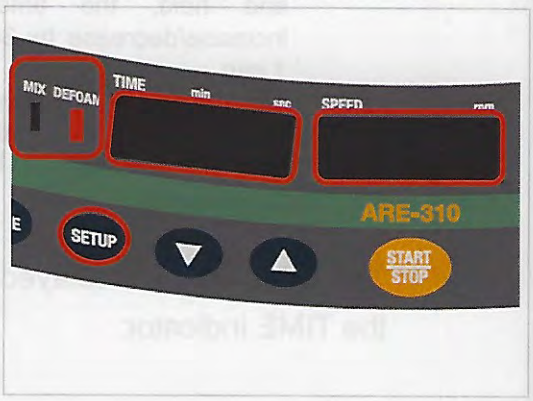

8) Push the SETUP button.

The TIME indicator will light up.
The defoaming time can be set.

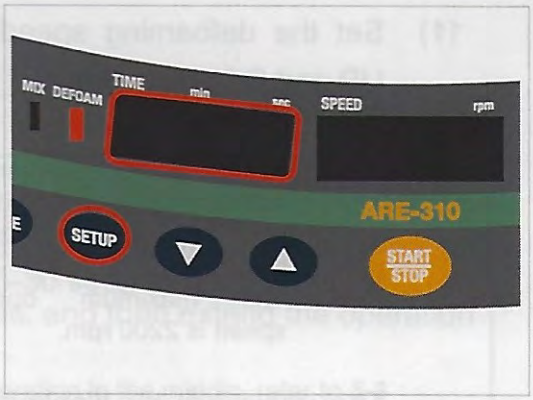

9) Set the defoaming time with UP and DOWN buttons.

- Set "0" when not defoaming.
- When the button is pushed and held, the time will increase/decrease by 30 s or 1 min.
- The maximum operation time is 30 min. When the time is over 30 min, "t t t t" will be displayed.

The value will be displayed on the TIME indicator.

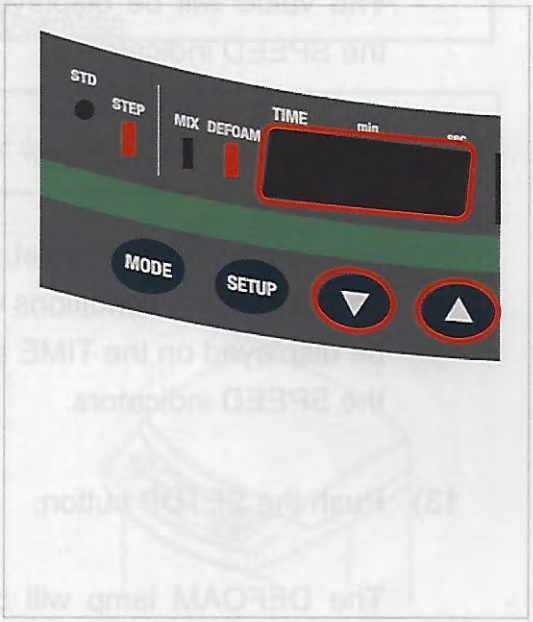

10) Push the SETUP button.

The SPEED indicator will light up.
The defoaming speed can be set.

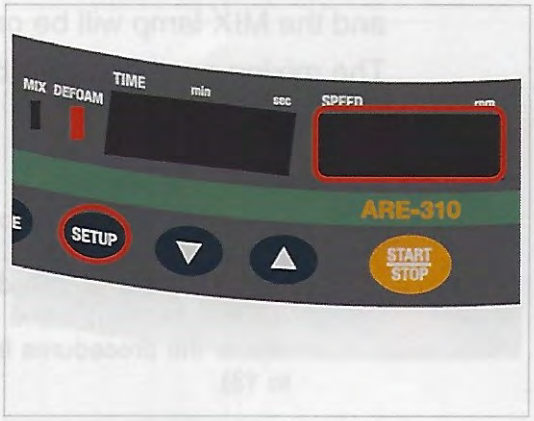

11) Set the defoaming speed with UP and DOWN buttons.

- Set "0", when not defoaming.
- Increase/Decrease by 10 rpm each time when the button is pushed.
- The maximum operation speed is 2200 rpm.

The value will be displayed on the SPEED indicator.

12) Push the SETUP button.

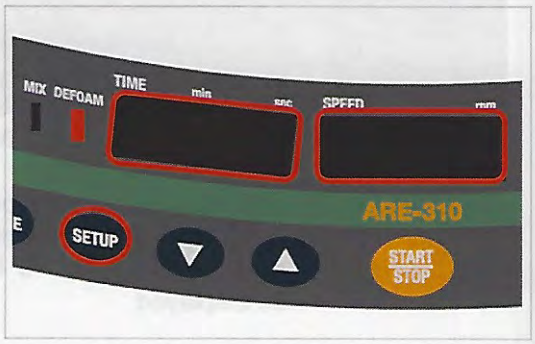

The defoaming time is set.
The defoaming conditions will be displayed on the TIME and the SPEED indicators.

13) Push the SETUP button.

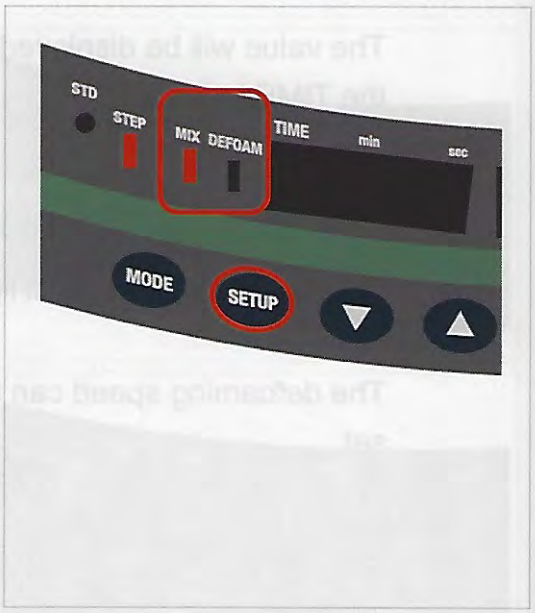

The DEFOAM lamp will be off and the MIX lamp will be on.
The mixing conditions will be displayed.

- To enter the conditions of STEP 2-5, push the STEP button to light up the desired STEP number, and then repeat the procedures from 2) to 13).

- The operating conditions need to be registered in MEMORY to save. See **5-5 Memory Registration**.

5-2 Starting Operation

WARNING	• When operating for the first time or operating with pyrogenetic/high-viscosity/powder/ low-boiling materials, perform a short trial operation (for 15-30 sec.) to check how the temperature rises, and then extend the operation process time. ☞ • To stop operation in the middle, refer to **5-3 Stopping Operation**.

CAUTION	• Do not splash or spill materials in the UNIT.

Start operation as follows.

1) Check that the door is closed.

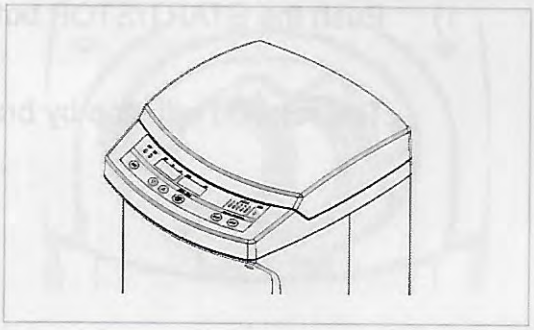

2) Check that the set operating conditions are displayed on the TIME and SPEED indicators, and then push the START/STOP button to start the operation.

The TIME indicator starts a countdown, and operation stops when the indicator displays "0." When operaton stops completely, the buzzer beeps.

• The door of the UNIT is locked when starting operation and stay closed until the operation stops. When you need to open the door during operation, stop the operation so that the door will be unlocked.

5-3 Stopping Operation

WARNING	• When there is an abnormal vibration/sound/odor/ smoke, immediately stop operation, turn off the power switch and disconnect the plug. • When the rotation does not stop, Err4 is displayed, and the buzzer beeps, turn off the power switch and disconnect the plug immediately.

CAUTION	• Attend to the UNIT within 30 minutes after operation.

Stop the UNIT during operation as follows.

1) Push the START/STOP button.

The rotation will stop by brake.

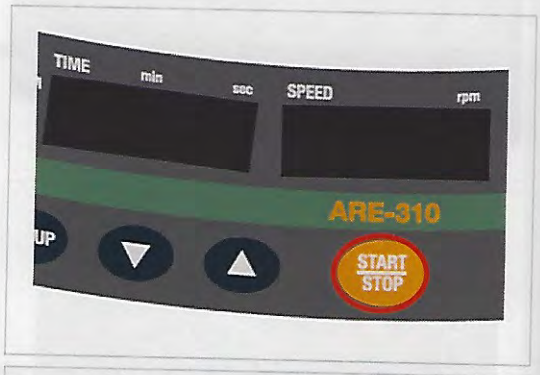

2) When rotation stops completely, the door lock is released and can be opened.

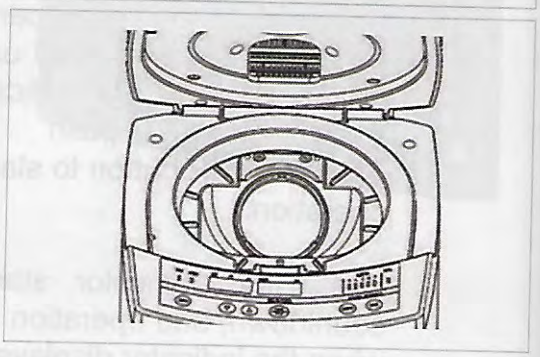

5-4 Removing Container from Cup Holder

Remove the container/adapter from cup holder after operation is finished.
(A 300-ml container is shown below as an example.)

1) Open the door of the UNIT.

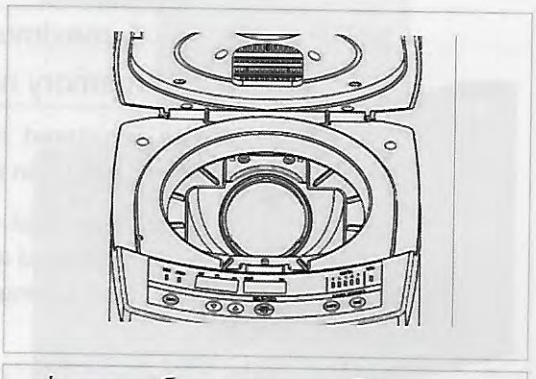

2) Remove the container (or the adapter) from cup holder.

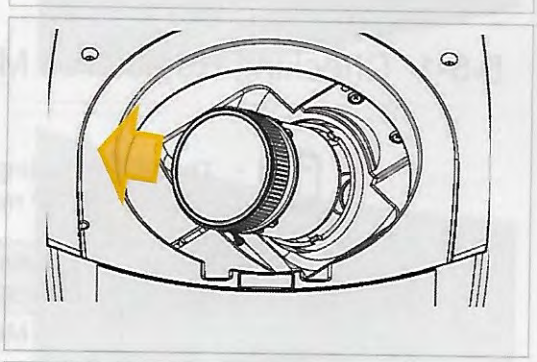

3) Open the lids of container and check the performed status.

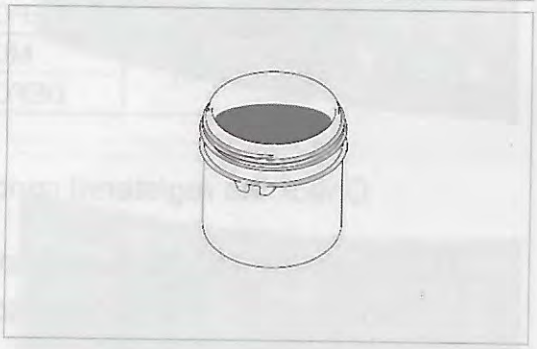

- If the performed status is insufficient, adjust the operation time and repeat mixing.
- The performed status varies depending on the type/viscosity/specific gravity of materials as well as the property and amount of additives, even when using the same setting. It is advisable to change the conditions several times to find standard settings for each material.

5-5 Memory Registration

Up to 5 operating conditions can be registered and saved in each STD (standard) mode and STEP mode.

STD mode	Only STEP 1 can be registered in one memory number
STEP mode	A maximum of 5 steps can be registered in one memory number

- The registered operating conditions will remain even after the power has been turned off.
- A condition that is not registered as a memory is lost when the power is turned off or when other registered memories are loaded. To keep a setting condition, save it in 1 of the 5 recipes.

5-5-1 Checking Registered Memory

- The factory setting values below are already registered in each STD and STEP mode.

MEMORY No.	Operation Mode (MIX/DEFOAM)	Operation Time (TIME)	Revolution Speed (SPEED)
1	MIX	30 s	2000 rpm
	DEFOAM	30 s	2200 rpm
2~5	MIX	0	0
	DEFOAM	0	0

Check the registered conditions (mode/ time/speed) as follows.

1) Push the MODE button to light the STD or STEP lamp to see the condition.

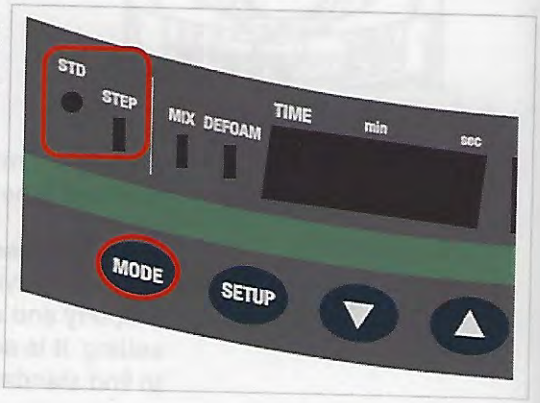

2) Push the MEMORY button to light the memory number to check.

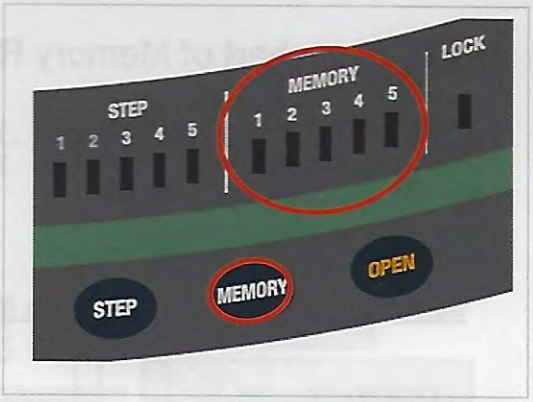

- The MEMORY lamp is lit in the order of 1→2→3→4→5 each time the MEMORY button is pushed.

3) Push the STEP button to light the step number to check.

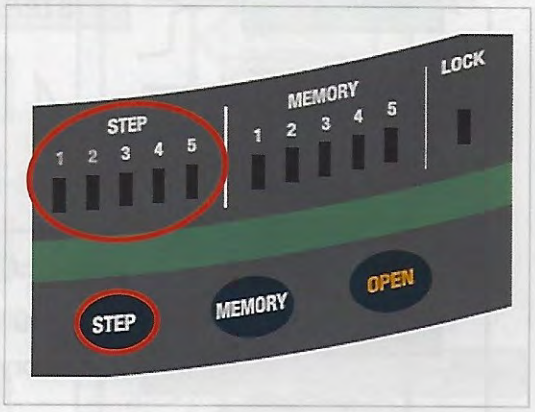

- The STEP lamp is lit in the order of 1→2→3→4→5 each time the STEP button is pushed.

4) Push the SETUP button to light the MIX or DEFOAM lamp to see the condition.

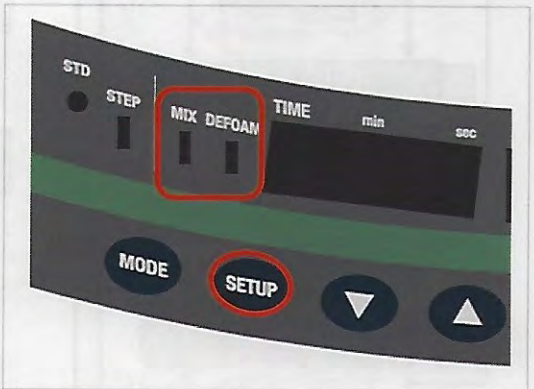

5) Check the operating time and revolution speed that are displayed on the TIME and SPEED indicators.

5-5-2 Flowchart of Memory Registration

● **STD (standard) Mode**

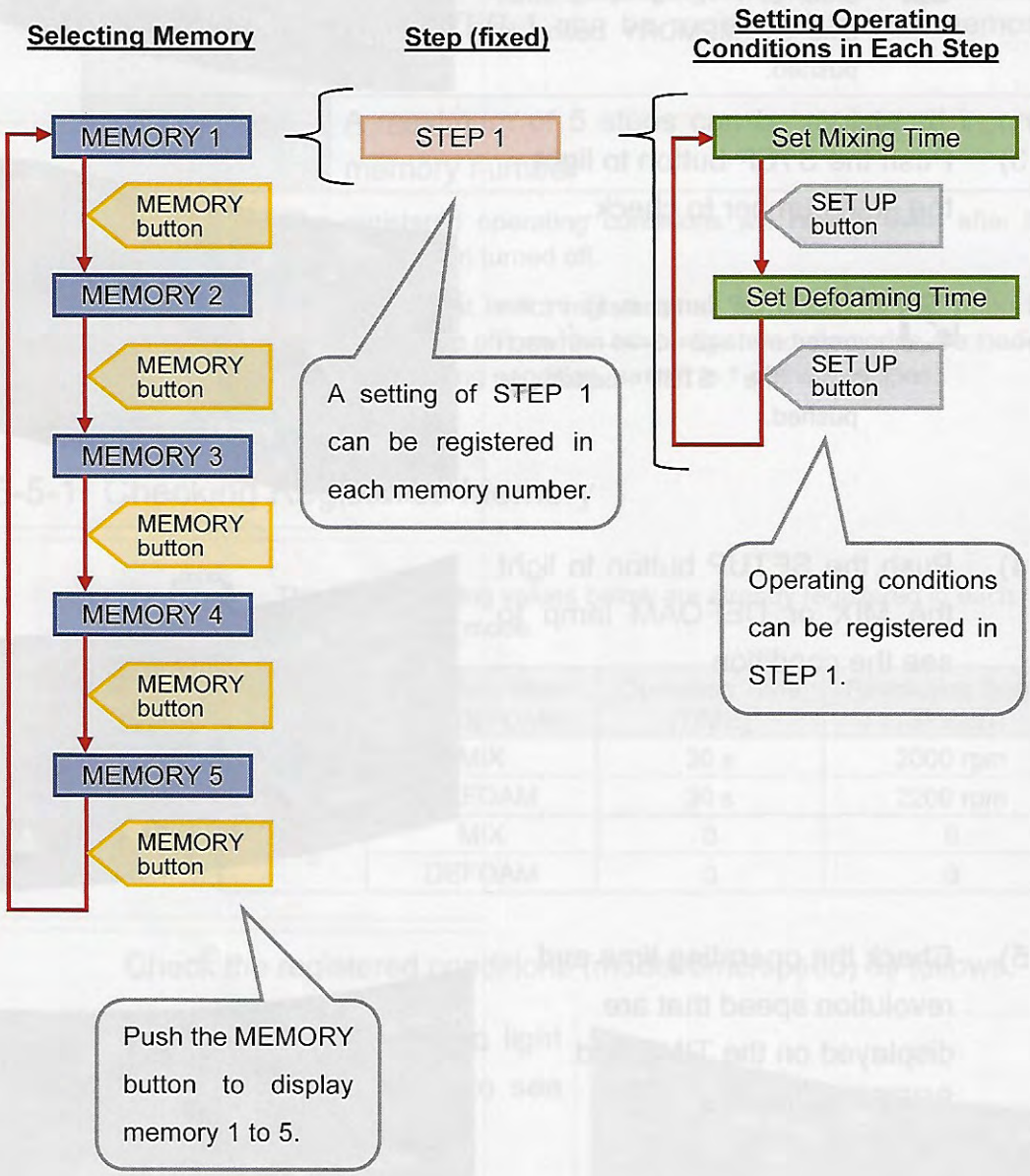

● STEP Mode

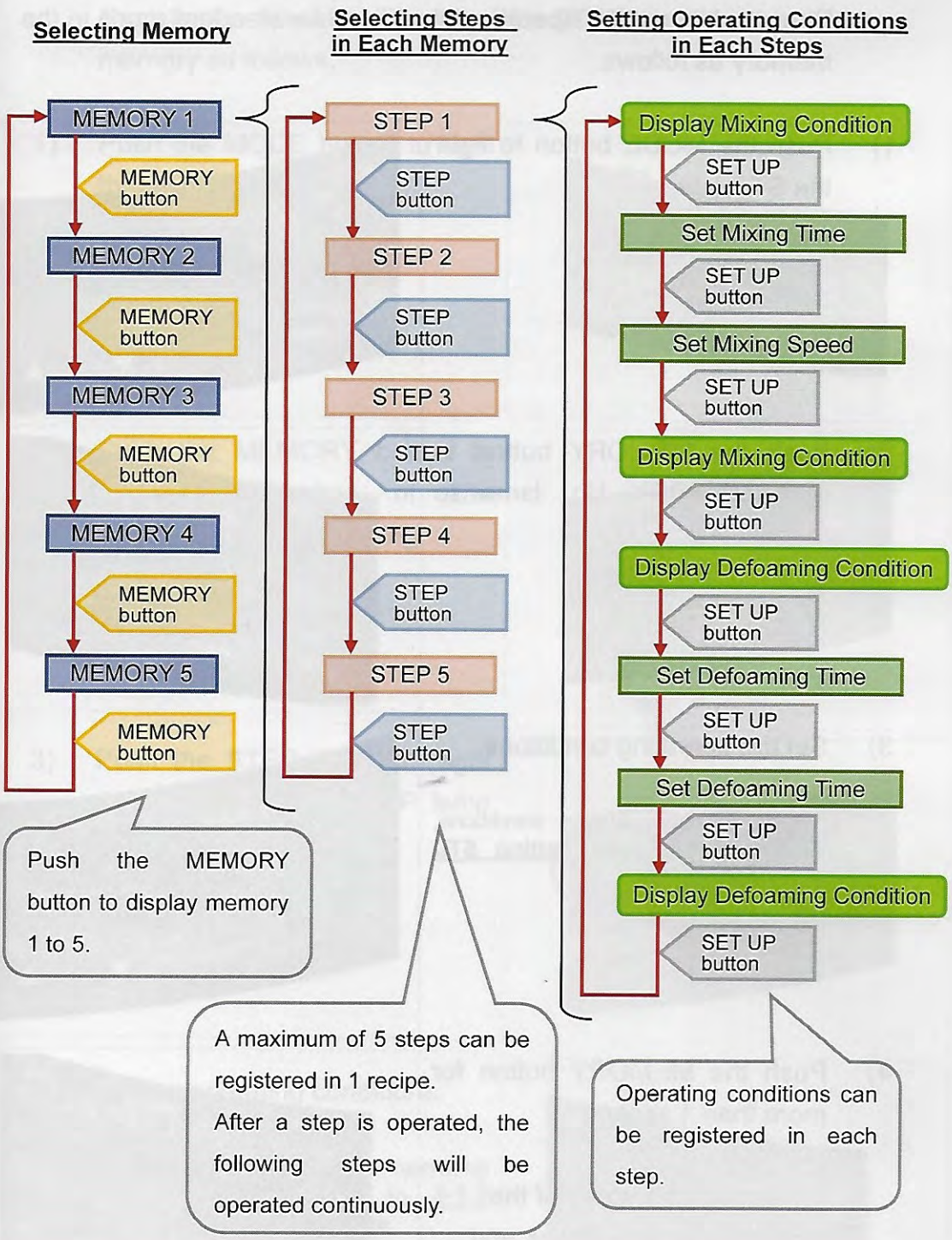
Selecting Memory
Selecting Steps in Each Memory
Setting Operating Conditions in Each Steps
MEMORY 1
MEMORY button
MEMORY 2
MEMORY button
MEMORY 3
MEMORY button
MEMORY 4
MEMORY button
MEMORY 5
MEMORY button
STEP 1
STEP button
STEP 2
STEP button
STEP 3
STEP button
STEP 4
STEP button
STEP 5
STEP button
Display Mixing Condition
SET UP button
Set Mixing Time
SET UP button
Set Mixing Speed
SET UP button
Display Mixing Condition
SET UP button
Display Defoaming Condition
SET UP button
Set Defoaming Time
SET UP button
Set Defoaming Time
SET UP button
Display Defoaming Condition
SET UP button
Push the MEMORY button to display memory 1 to 5.
A maximum of 5 steps can be registered in 1 recipe.
After a step is operated, the following steps will be operated continuously.
Operating conditions can be registered in each step.

5-5-3 Memory Registration for STD Mode

Register to save the operating conditions for standard mode in the memory as follows.

1) Push the MODE button to light the STD lamp.

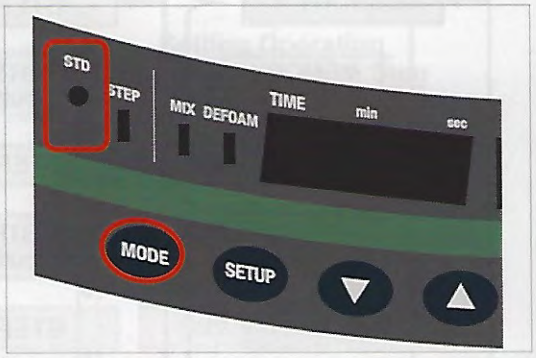

2) Push the MEMORY button to light MEMORY No. lamp to register.

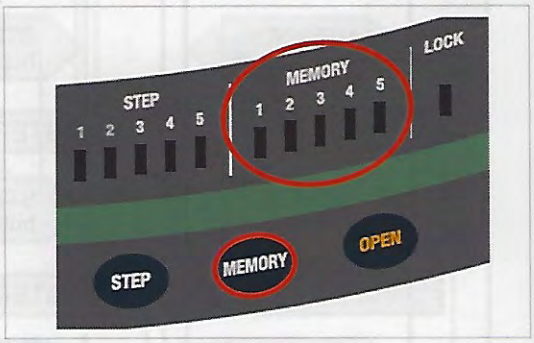

3) Set the operating conditions.

☞ • To set operating conditions, refer to **5-1-1 Setting STD Mode**.

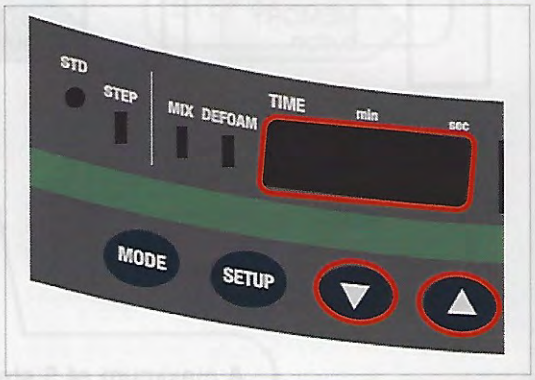

4) Push the MEMORY button for more than 1 second.

The selected number of the MEMORY lamp will blink and the buzzer will beep

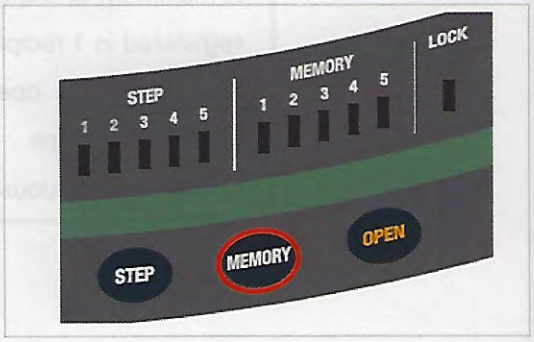

5-5-4 Memory Registration for STEP Mode

Register the operating conditions for STEP mode to save in the memory as follows.

1) Push the MODE button to light the STEP lamp.

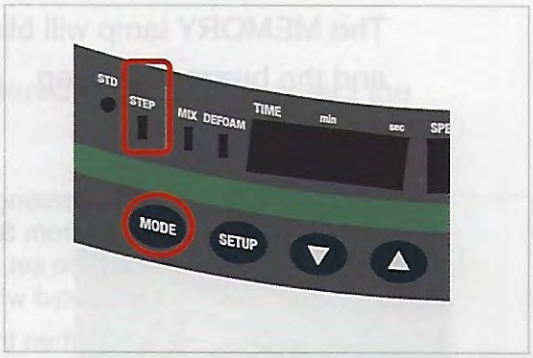

2) Push the MEMORY button to light the number of the MEMORY lamp for setting.

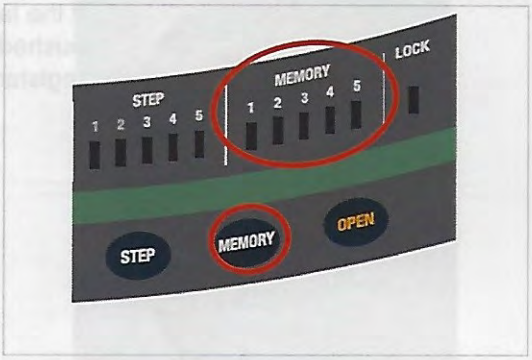

3) Push the STEP button to light the number of the STEP lamp for setting.

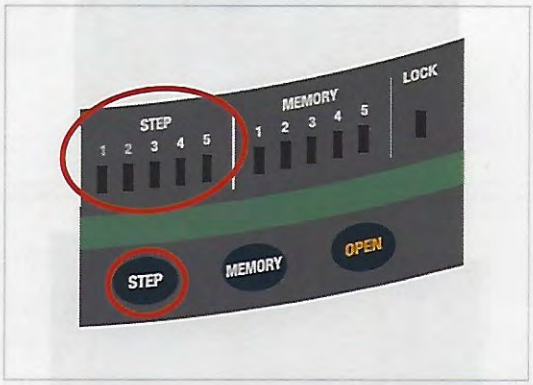

4) Set the operating conditions.

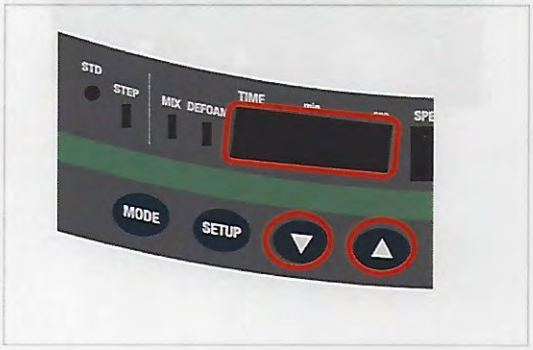

- To set the operating conditions, refer to **5-1-2 Setting STEP Mode**.
- Repeat the procedure 3)-4) to set the operating conditions for STEP1-5.

5) Make sure the last number of the STEP lamp is lit, and then push the MEMORY button for more than 1 second to register.

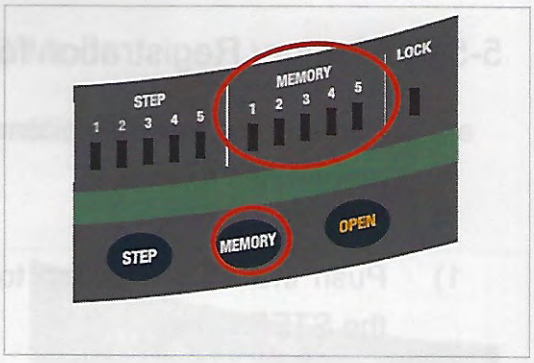

The MEMORY lamp will blink and the buzzer will beep.

- The operating conditions that can be registered in memory will be from **STEP1 to the lit number**. Even if there is a condition set after the selected (lit) number, the condition will be deleted when registered.

  e.g.) When the condition of STEP1-4 is set:
  If the lamp of STEP 3 is lit and the MEMORY button is pushed and held, the conditions from 1-3 will be registered and the condition in STEP 4 will be deleted.

5-5-5 Changing Registered Memory

Registered memories can be changed by reregistering the setting conditions.

5-5-6 Selecting Memory

When operating with a setting registered in MEMORY, select the setting condition to start operation.

1) Push the MODE button to light the mode lamp you want to check.

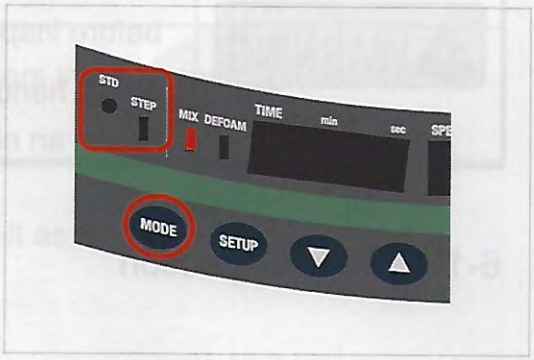

2) Push the MEMORY button to light MEMORY No. lamp to operate.

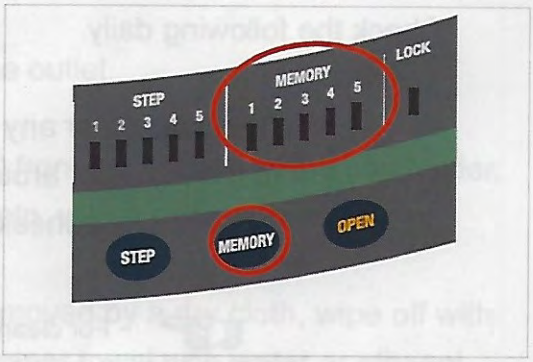

3) Push the START/STOP button to start operation.

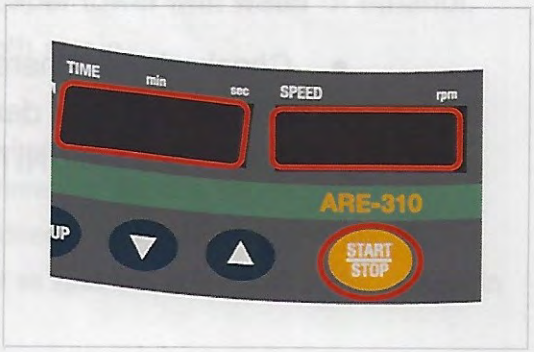

6. Maintenance

6-1 Inspection

In order to use the UNIT safely, perform inspection regularly.

WARNING	・Turn off the power switch and disconnect the plug before inspection. ・Do not handle the power plug with wet hands. It may cause an electric shock.

6-1-1 Daily Inspection

Check the following daily.

- Check whether any material or foreign objects are adhered to the inside or around the cup holder and rotating part. Clean if any adhesion is observed.

・For cleaning, refer to **6-2 Cleaning**.

- Check whether there is any external damage such as breakages, large dents or rust.
  Do not use the UNIT if there is a problem.

6-2 Cleaning

WARNING	• Turn off the power switch and disconnect the plug before cleaning. • Do not handle the power plug with wet hands. It may cause an electric shock.

CAUTION	• Do not insert fingers into the openings around the rotating tray

When the UNIT becomes dirty, clean it as follows.

1) Switch off (O) the power.

2) Disconnect the plug from the outlet.

3) Wipe off dirt (materials, etc.) from inside/around the cup holder, rotating tray, control panel, etc. with a cloth, waste cloth or paper towel.
If dirt or stains cannot be removed by a dry cloth, wipe off with a wet cloth, waste cloth or paper towel with water or ethanol, and then wipe with a dry cloth again.

- For cleaning, do not use benzine, thinner, alkaline detergent or bleach, which may deteriorate or discolor the UNIT.
- Do not splash the UNIT directly with water or neutral detergent.
- Dispose of such material as specified in the SDS of the material in use.
- Dispose any used cloth, rag, or paper towel in accordance with national and local laws and regulations.

6-3 Troubleshooting

When you have any problems with the UNIT, check the following before contacting for repair.
If the problem still cannot be solved, contact the dealer from whom you purchased the UNIT or THINKY.

☞ · For contact information, refer to **Introduction.**

Case	Check Point	Reference
Power cannot be turned on.	Is the power cable plugged correctly in the outlet and inlet of the UNIT?	3-4 Power Connection
	Is the power switch turned on (I)?	4-2-1 Power On
	Is the fuse blown? ⇒Replace with the specified fuse if it has blown.	6-5 Replacing Fuse
Operation does not start after pushing START/STOP button.	Is the door of the UNIT closed when the START/STOP button is pushed? ⇒Push the START/STOP button after closing the door.	5-2 Starting Operation
	Are Shipping Locks removed? ⇒If Shipping Locks are not removed properly, rotating parts will be locked, and operation cannot be started.	3-3 Unlocking and Storing Shipping Locks
	Is the operation time set to "0"?	5-1 Mode Setting

Case	Check Point	Reference
There is abnormal vibration or noise.	Is the counterbalance adjusted properly? ⇒If the counterbalance is not adjusted properly, it may cause off-balanced rotation, vibration/ noise increase, and/or damage of the UNIT.	4-5 Adjusting Counterbalance
Cannot mix or defoam properly.	Is the processing time properly set?	5-1 Mode Setting
	Have the conditions in the memory unchanged?	5-5 Memory Registration
	Is the amount of material correct?	4-1-1 Container and Capacity
Door cannot be opened even when the OPEN button is pushed.	Is the power of the UNIT on when the OPEN button is pushed? ⇒The door cannot be opened when the power is off, turn the power on and push the OPEN button.	4-3 Opening Door

6-4 Error Display

There is a door sensor, a vibration sensor and a rotation sensor in the UNIT. Error will be displayed on the control panel under abnormal conditions, and the UNIT will stop.
If the cause is clear, resolve the error by removing the cause.
If the cause or the content of the error is unclear, contact the dealer from whom you purchased the UNIT or THINKY.

☞ · For contact information, refer to **Introduction.**

The following table shows the main causes and measures for errors.

Error Display	Cause	Measure
Err1b	Operation was started with the door open.	Close the door to operate.
	An attempt was made to open the door during operation.	Do not try to open the door during operation.
Err1c	The door cannot be locked.	Contact the dealer from whom you purchased the UNIT or THINKY.
Err2	Abnormal vibration occurred abruptly during operation.	Check whether the container/adapter has been detached, come off or any parts have been damaged.
	The vibration value exceeded the rated value.	Check whether the gross weight is within the range of specifications. Adjust the counterbalance.
Err4	The motor and/or drive circuit is/are abnormal.	Turn off the power and disconnect the power plug if rotation does not stop. Contact the dealer from whom you purchased the UNIT or THINKY.
Err3,5,6, Err10-Err11	Abnormality of rotation speed occurred after starting operation.	Contact the dealer from whom you purchased the UNIT or THINKY.
Err7-Err9	Electronic circuit malfunction or the control software error.	

6-5 Replacing Fuse

WARNING

- Remove the power plug first when replacing a fuse.

Replacing fuse specification	
Rating	250V-10A
Dimensions	Φ6.4×30 mm
Breaking Current	300A
Breaking Characteristic	Anti-rush current

If a fuse is blown, replace it as follows.

1) Switch off (O) the power.

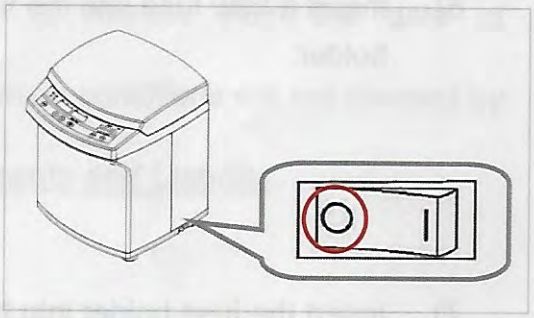

2) Disconnect the plug from the outlet.

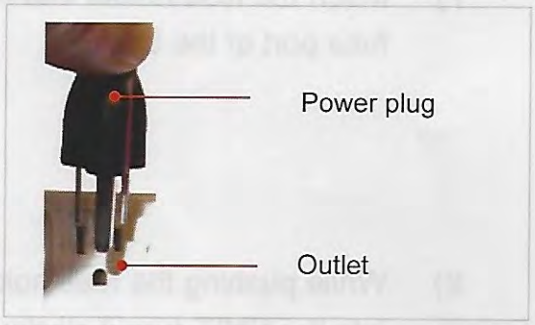

3) Using a screwdriver (Phillips-head or Flat-head), turn the fuse holder on the rear side of the UNIT counterclockwise.

When turning the fuse holder a little, the fuse will be pushed out by the spring inside.

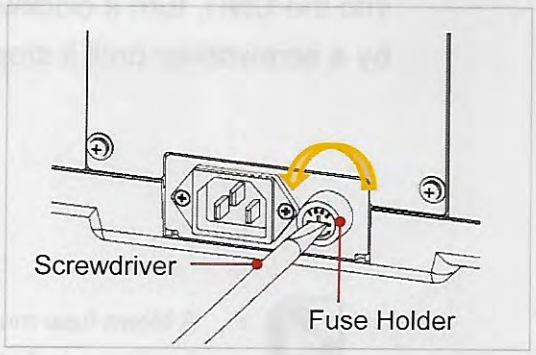

4) Pull out the fuse holder by hand.

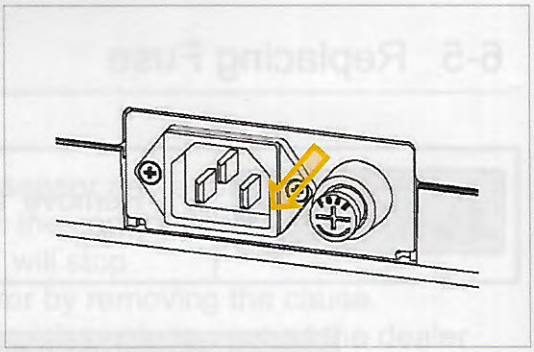

5) Remove the fuse from the fuse holder.

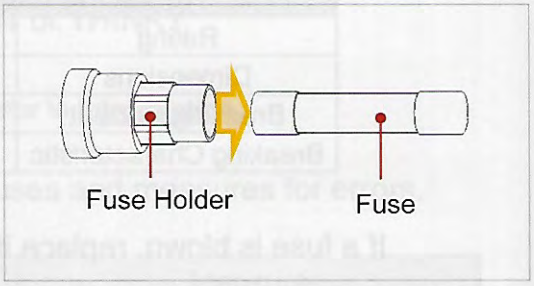

6) Insert a new fuse into the fuse holder.

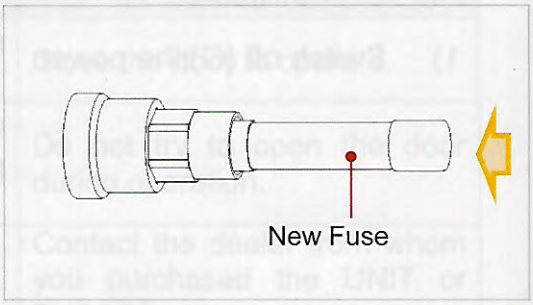

7) Insert the fuse holder into the fuse port of the UNIT.

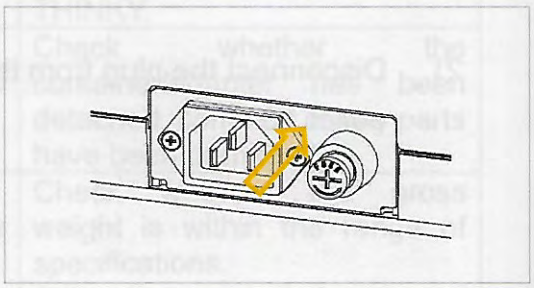

8) While pushing the fuse holder into the UNIT, turn it clockwise by a screwdriver until it stops.

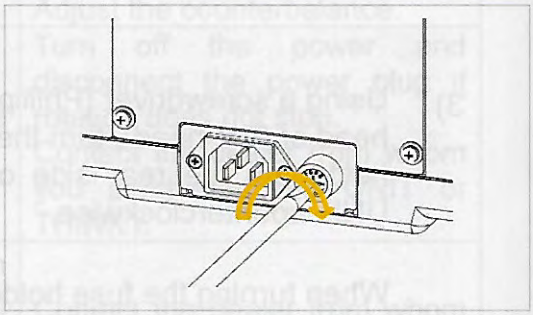

- A blown fuse must be discarded in accordance with national and local laws and regulations.

6-6 Warranty and After-sales Service

Please contact the dealer from whom you purchased the UNIT or THINKY if anything is unclear about the maintenance/after-sales service/handling of the UNIT.

☞ · For contact information, refer to **Introduction**.

THINKY will repair or replace the UNIT within the warranty period in the case there are any defects where the UNIT has been operated in conformity with the Instruction Manual and other reference materials officially issued by THINKY, and/or any defects in manufacturing under proper usage.
The warranty period is for 12 months from the date of delivery/inspection.
However, some cases under certain conditions are not covered by the warranty.
For details, please refer to **Warranty and Liability**.